SEG

Whataburger Mesa
5427 S. Power Rd

Design and Site Plan
Project Narrative

(Example Rendering)

Request:
Design and Site Plan Review for a proposed fast-food restaurant located at 5427 S. Power Rd., Mesa, AZ

Pre-App Submittal: January 25, 2021
1st DR/Site Plan Submittal: May 14, 2021
2nd DR/Site Plan Submittal: June 11, 2021

DEVELOPMENT TEAM

Owner

GS Trust/5427 S. Power LLC
Contact: Kyle Davis
5427 S. Seton Dr.,
Gilbert, AZ 85295
Phone: (480) 889-2566
Email: kdavis@cpiaz.com

Developer

Whatabrands Real Estate
Contact: Katie Nelson
300 Concord Plaza Drive
San Antonio, TX 78216
Phone: (210) 476-6842
Email: knelson@wbhq.com

Civil Engineer & Planning

Sustainability Engineering Group (SEG)
Contact: Kevin Zenk
8280 E. Gelding Drive, Ste. 101
Scottsdale, AZ 85260
Phone: (602) 326-0581
Email: kevin@azseg.com

Landscape Architect

Harrington Planning and Design
Contact: Jason Harrington
1921 S. Alma School Rd., Ste. 204
Scottsdale, AZ 85251
Phone: (480) 250-0116
Email: jason@harringtonplanningdesign.com

TABLE OF CONTENTS

Page

I. Introduction **1**

Figure 1 – Aerial Map **1**

II. Existing Conditions and Existing Zoning **1**

III. Site Plan Overview **2**

Building & Lot Layout **2**

Parking & Circulation **2**

Landscape **3**

Offsite Improvements **3**

IV. Architecture **3**

V. Conclusion **4**

I. Introduction

Sustainability Engineering Group ("SEG") is requesting a design review and site plan approval for a proposed fast-food facility (the "Project") located at 5427 S. Power Rd., Mesa; with an Assessor's Parcel # 304-37-018C. The Project proposes to develop the existing 2.41-acre tract of land and construct a new 3,751 SF fast food facility with a 2-lane drive-through. An aerial map has been provided (see ***Figure 1 – Aerial Map***) to show location of the subject property and contextual reference.

Figure 1 – Aerial Map

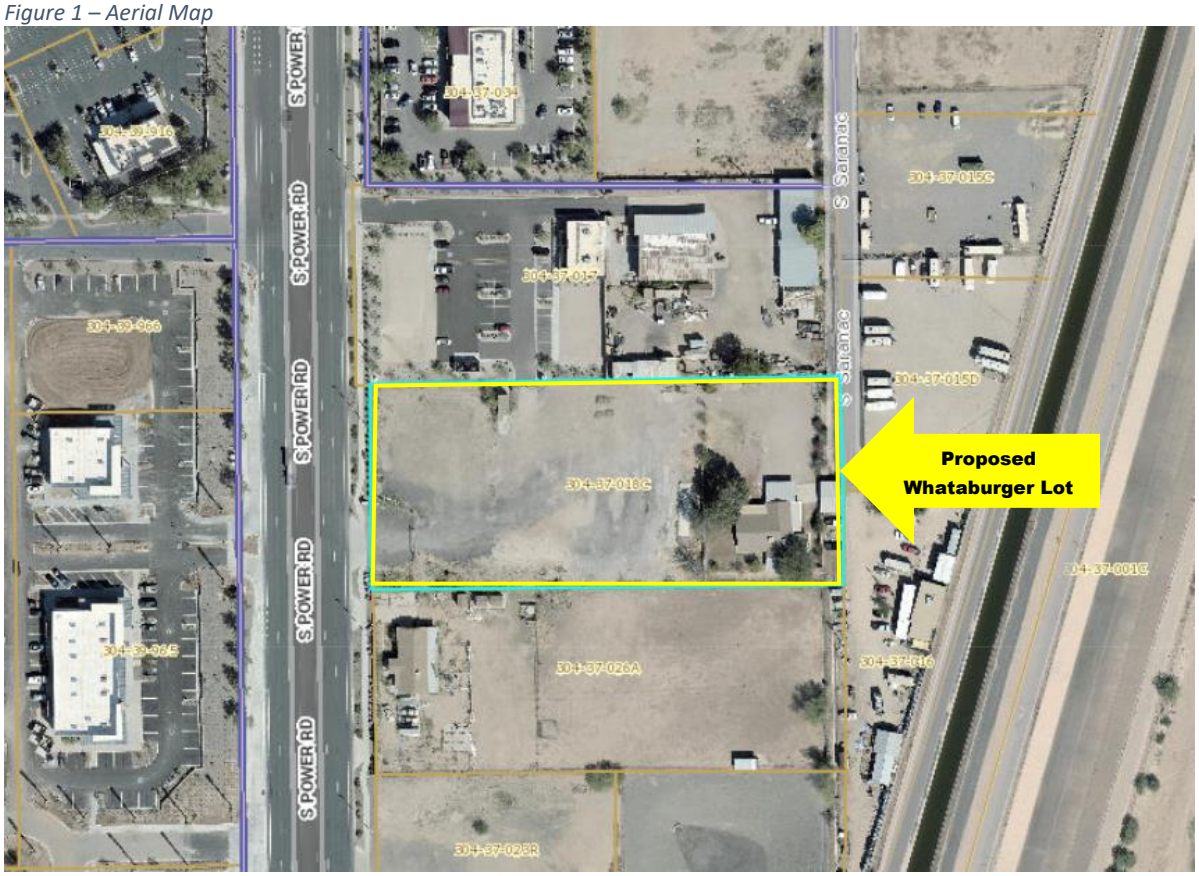

The Site Plan details the proposed layout of the Whataburger building, drive-through lanes, parking area and circulation within the existing lot.

II. Existing Conditions and Existing Zoning

The property is mostly undeveloped with some grading and minimal paving. At the rear of the property there is an old unoccupied single-family residential building that will be demolished by the property owner. Direct entrance to the property will be accessed through an existing 40' driveway off of S. Power Road with secondary access through an existing cross-access easement from the north adjacent property. The parcel has a unique duel zoning of LI (Light Industrial) and LC (Limited Commercial). Approximately 177' of the front portion of the property is zoned LC with approximately 313' of the rear zoned LI. Previously approved cases Z05-029 and Z05-044 originally rezoned the property from residential to commercial and light industrial.

Table A – Surrounding Land Use and Zoning Districts

	Existing Land Use	Existing Zoning
North	Commercial (Dispensary)	LC/LI

East	Storage (Industrial)	LI
South	Undeveloped (future commercial land use)	LC
West	Retail/Commercial (Across Power Road)	RC (Gilbert Zoning)

III. Site Plan Overview

Building & Lot Layout

The restaurant building is oriented to utilize entry off of the main driveway from Power Road. Building placement will be primarily on the west half of the lot while utilizing the eastern half of the lot for retention and landscaping. The total square footage of the building will be 3,751 SF with a parking count of forty-eight (48) spaces, as required per Mesa Parking Standards. The restaurant also proposes a double-lane drive-through which would be oriented perpendicular to Power Rd in order to minimize drive-through activity against Power Rd. Customer and emergency vehicles will access the lot through the main driveway off of Power Road and the cross-access easement from the north adjacent property.

The below table provides the development standards of the proposed drive-through facility in relation to the LC and LI district requirements:

Standard	LI	LC	Proposed Whataburger
Building Height:	40 ft.	30 ft.	21 ft.
Min. Lot Size:	1-acre	10,000 s.f.	104,979 s.f. (2.41-acres)
Min. Lot Width:	100 ft.	100 ft.	± 214 ft.
Min. Lot Depth:	100 ft.	100 ft.	± 492 ft.
Setback (1) (2)			
Front	15 ft.	15 ft.	26.85 ft.(3)
Interior Side	15 ft.	15 ft.	5 ft.(4)
Rear	15 ft.	15 ft.	207.65 ft. (utilized as retention and landscape)

(1) Setbacks shall be landscaped
(3) Existing landscape in the ROW provides an additional +/- 20 ft. of landscape buffering along Power Rd.
(4) Per pre-app comments, side setbacks can be reduced with proposed cross-access easement showing connectivity to adjacent north and south properties.

Parking & Circulation

The layout of the proposed development is designed to provide the adequate circulation pattern that will satisfy customer vehicles while meeting the parking needs of the overall site. It is the development's intent to preserve the existing cross-access at the north as a secondary route so that vehicles can access the restaurant property. A second access easement is proposed to provide for future connectivity between the subject lot and the neighboring south property. The width of the lot provides enough space to maintain the standard drive aisle requirement while providing enough space required for emergency vehicle access and turn radius.

The location of the trash enclosures provides a suitable location that will enable refuse collection vehicles a convenient 1-way access to the trash receptacle entering from the adjacent north cross access and exiting onto Power Road. Parking rows will align the perimeter property lines with the exception of Power Road. Here landscape buffering will be placed to help buffer the site from the main Power Rd arterial. The Drive-through lanes will also be provided a 5' wide landscape buffer that will help separate the drive-through activity from the adjacent parking drive aisles. All parking and circulation standards will follow the site design standards for circulation and parking:

Standards	Required	Proposed Whataburger
Standard Parking Stall Size:	9' x 18'	9' x 18'
Minimum Drive Aisle Width (90° Stalls)	24'	25', 26', and 30'
Drive-Through Lane Landscape Buffer:	5'	5'
Min. Fire Access Width (Lane):	20'	20'
Fire Access Turn Radius:	35'/55'	35'/55'

To view the overall circulation, setback and building orientation design, please refer to the attached site plan.

Landscape
It is understood that setback areas are to be landscaped in order to provide proper buffering along the road frontage as well as buffering from the parking areas. The drive-through aisle provides a 5' wide area that is expected to be landscaped in order to minimize traffic noise from the drive-through activity. Existing landscape is already developed within the ROW of Power Rd and will be provided an additional +/- 27' of setback across the basin within the property line.

Offsite Improvements
The pre-app report specified that any access being requested to S. Saranac Rd would require offsite improvements. As this project is not requesting access from S. Saranac, we are not required to make improvements to S. Saranac. The only offsite improvements required would be any necessary improvements in the Power Rd ROW.

IV. Architecture

The site layout features elements that will create a diverse façade with mixed materials and colors. Building orientation will utilize the Power Rd frontage to create a diverse building façade that will provide foundation landscape as well as other architectural elements including:

Table of Architectural Elements	
Roofline Architecture	• Varying parapets to create varying roofline while fully screening mechanical equipment
Building Face	• 15' foundation at building front entrance with 5' wide landscape planting. • Mixed materials: – Brick Veneer, – Corrugated metal paneling, – Aluminum window paneling – Prefinished metal paneling. • Façade recess to break apart flat surfacing
Colors	• Diverse shading and color tones including flat, semi-gloss and sheen
Accents	• Various window and canopy shapes, colors and heights. • Subtle fixtures consistent with principal building palette.

The function of the building's location serves to provide an aesthetic design to the Power Rd frontage while maintaining appropriate setback. The colors of the building are specific to the restaurant's corporate palette but are consistent with the overall desert and surrounding business palette. No extreme colors (i.e. neon, florescent) or materials are proposed within the design of the facility. Building design and color palette can be viewed in the attached *Building Elevation* plans submitted with this application.

V. Conformity with Gateway Strategic Development Plan

The Gateway Strategic Development Plan ("GSDP") serves as a development and economic guideline for project developed with the Phoenix-Mesa Gateway Area. Specific design and development goals outline the design and economic strategy that the City looks to achieve. This project highlights the goals that will be achieved within the GSDP. The below list:

Goal 1 – Consistency and Compatibility with Existing Land Use Patterns
The proposed development brings a land use that is consistent with the overall commercial theme of the area. Currently the surrounding uses include similar "Limited Commercial" and " Light Industrial" uses that are grouped in a manner that provide connectivity and appropriate landscape. Our proposed

developed adds the broadening development with introduction of a similar uses that will operate accordingly with the existing commercial development.

Goal 2 – Implement Strategic Landscape

The development proposes desert friendly landscape that will utilize minimal water while providing canopy coverage to reduce Heat Island Effect. The proposed landscape plan shows how existing landscape will be maintained and will utilize more sustainable plant species for low water maintenance.

Goal 3 – Enhance Employment Opportunity

The proposed development utilizes what would otherwise be vacant land for the purpose of adding a new quick service restaurant that will help to stimulate growth for neighboring parcels while providing more commercial development for employment opportunities for nearby residences.

Goal 4 – Promote Low Impact Development

The development intends to only utilize a portion of the existing 2.41-acres of land. The remaining portion of the parcel that will not be developed will be utilized for retention. The intent of having extra surface space is to promote more natural retention opportunities rather than installing man-made infrastructure that is found on similar lot sizes.

VI. Conclusion

This proposal seeks review and approval of the site plan and architectural design for this project to ensure that the proposed Whataburger will provide an aesthetic, logical and useful component to this commercial area of Mesa.

WHAT-A-BURGER RESTAURANT

POWER ROAD & RAY ROAD
MESA, ARIZONA 85029

PLANTING MATERIAL LEGEND

TREES	SIZE	NOTES	QTY
Pistacia atlantica x integerrima 'Red Push" Pistache Caliper Size: 1.5"	24" Box H 9' W 3.5'	*ADWR	25
Acacia salicina Willow Leaf Acacia Caliper Size: 1.5"	24" Box H 8' W 3.5'	Multi *ADWR	13
Chilopsis linearis Desert Willow Caliper Size: 2.0"	36" Box H 9' W 6'	*ADWR	12
Vitex agnus-castus Chaste Tree Caliper Size: 1.5"	24" Box H 7' W 4'	*ADWR	21

GROUNDCOVERS			QTY
Lantana montevidensis Trailing Lantana 'Purple'	5 Gallon	*ADWR	114
Convolvulus mauritanicus Ground Morning Glory	5 Gallon	*ADWR	64

SHRUBS / ACCENTS			QTY
Ruellia californica Baja Ruellia	5 Gallon	*ADWR	72
Eremophila hygrophana Blue Bells	5 Gallon	*ADWR	142
Muhlenbergia rigens Deer Grass	5 Gallon	*ADWR	76
Hesperaloe parviflora Red Yucca	5 Gallon	*ADWR	85

LANDSCAPE MATERIALS	
Decomposed Granite. 3/4" minus, Express Gold 2" deep in planting areas per plan.	60,100 sq.ft.

*ADWR = Arizona Department of Water Resources Approved Low-Water Use Plant

LANDSCAPE SITE NOTES

1. UNAUTHORIZED CHANGES TO DRAWINGS - THE LANDSCAPE ARCHITECT SHALL NOT BE RESPONSIBLE FOR, OR LIABLE FOR, UNAUTHORIZED CHANGES TO OR USE OF DRAWINGS. CHANGES TO THE PLANS MUST BE IN WRITING AND MUST BE APPROVED BY LANDSCAPE ARCHITECT PRIOR TO COMMENCEMENT OF WORK.
2. OWNER SHALL OBTAIN AND PAY FOR ONLY CITY OF MESA ISSUED PERMITS TO COMPLETE WORK. CONTRACTOR SHALL PAY FOR ALL OTHER PERMITS.
3. NOTIFY LANDSCAPE ARCHITECT AT LEAST 4 WORKING DAYS IN ADVANCE PRIOR TO REQUIRED OR DESIRED INSPECTION AT (480) 250-0116.
4. STAKE SITE MATERIALS LOCATION AND RECEIVE LANDSCAPE ARCHITECT APPROVAL PRIOR TO INSTALLATION.

IRRIGATION LEGEND

SYSTEM DESIGNED USING A RESIDUAL PRESSURE OF 70 PSI

SYMBOL		
M	WATER METER	PER MESA STANDARDS, NEW IRRIGATION METER - 1.0" SIZE, REF. CIVIL PLANS
	RPBFA	BACKFLOW PREVENTER ASSEMBLY, FEBCO 825-Y, 1.0" SIZE PER PLAN, PROVIDE METAL ENCLOSURE.
A	CONTROLLER	CONTROLLER A = 12 STATION HUNTER ACC2 WALL MOUNT WITH LOCKING METAL ENCLOSURE, PAINT TO MATCH ARCHITECTURE
	GATE VALVE	NIBCO MODEL# T-113, SIZE PER LINE BRONZE MATERIAL
	BALL VALVE	SPEARS MODEL# TRUE UNION 2000, SIZE PER LINE SCH. 80 PVC MATERIAL
	DRIP VALVE	HUNTER ICV SERIES WITH 150 MESH WYE-STRAINER SIZE PER PLAN
	FLUSH CAP	SPEARS FLUSH CAP 1/2" FLUSH VALVE
	PRESSURE REG.	SENNIGER 30 PSI - LOCATE IN SEPARATE BOXES MEDIUM FLOW 2-20GPM - 30 PSI (100 MESH)
N/S	EMITTER - SP	BOWSMITH 1.0 GPH (1 PER PLANT)
	EMITTER - MP	BOWSMITH 1.0 GPH 6 PORT (2 PER TREE) GROUPS OF SHRUBS WITHIN 6'.
	SERVICE POINT	CONNECT TO EXISTING POTABLE WATER SERVICE

PIPE LEGEND

	MAINLINE - SIZE PER PLAN PVC SCH. 40
	TREE LATERAL PVC SCH. 40 - SOLVENT WELD
	SHRUB LATERAL PVC SCH. 40 - SOLVENT WELD
	PIPE SLEEVE PVC SCH. 40 - 2 X PIPE SIZE MINIMUM
W W	WIRE SLEEVE PVC SCH. 40 - MINIMUM 1 1/2" SIZE

IRRIGATION GENERAL NOTES

1. IRRIGATION PLAN IS DIAGRAMMATIC. ADJUST LOCATION OF EMISSION POINTS TO PROVIDE FULL AND ADEQUATE COVERAGE OR ADD EMITTERS AS NECESSARY TO ENSURE 100% COVERAGE OF PLANT MATERIALS. PREVENT OVERSPRAY ON ADJACENT IMPROVEMENTS.
2. VERIFY WATER PRESSURE IN FIELD AND NOTIFY OWNER IMMEDIATELY SHOULD A DISCREPANCY EXIST.
3. COORDINATE IRRIGATION SLEEVES LOCATION AND SIZE WITH A MINIMUM DIAMETER TWICE THE SIZE OF THE IRRIGATION LINE. EXTEND SLEEVES 12" BEYOND EDGE OF PAVEMENT, WALL, WALKS OR CURB.
4. PROGRAM CONTROLLERS TO MAINTAIN SUFFICIENT FLOW RATES THROUGHOUT THE SYSTEM. ADJUST AS REQUIRED FOR SEASON AND PLANT MATERIAL UNTIL FINAL ACCEPTANCES.
5. LOCATE TAN COLOR (CARSON OR EQUAL) VALVE BOXES (IRRIGATION, GATE VALVE, FLUSH CAP, QUICK COUPLERS, AND OTHER ELEMENTS) IN PLANTER AREAS. DO NOT LOCATE VALVE BOXES IN A LAWN OR HARDSCAPE UNLESS REQUIRED AND APPROVED BY OWNER.

CITY OF MESA LANDSCAPE NOTES

1. LANDSCAPE CONTRACTOR SHALL CONFIRM LOCATION OF ALL UNDERGROUND UTILITIES PRIOR TO ANY EXCAVATION AND SHALL BE RESPONSIBLE FOR THE FOLLOWING:
A) DAMAGES TO SUCH UTILITIES CAUSED AS A RESULT OF THE CONTRACTORS ACTIVITIES.
B) DAMAGES TO EXISTING WALKS, WALLS, DRIVES, CURBS, ETC.
C) INSPECTING THE SITE IN ORDER TO BE FULLY AWARE OF EXISTING CONDITIONS PRIOR TO SUBMITTING A BID.

2. INSTALLATION OF ALL LANDSCAPE AND IRRIGATION MATERIAL SHALL COMPLY WITH SECTIONS 424, 425, 757, AND 795 OF THE MAG STANDARD SPECIFICATIONS AS AMENDED BY THE CITY OF MESA IN THE CURRENT EDITION OF THE MESA ENGINEERING PROCEDURES MANUAL LANDSCAPE & IRRIGATION STANDARDS.

3. CONTRACTOR SHALL REPAIR ANY DAMAGE MADE TO THE EXISTING SPRINKLER SYSTEM TO THE SATISFACTION OF THE CITY AT NO ADDITIONAL COST TO THE CITY.

4. LANDSCAPE REMOVAL IS A NON-PAY ITEM UNLESS OTHERWISE NOTED.

5. ALL EXISTING VEGETATION, WEEDS, DEBRIS, ETC., SHALL BE REMOVED FROM PROJECT AREA AND DISPOSED OF PROPERLY OFF THE SITE AT THE CONTRACTORS EXPENSE (SCARIFY EXISTING SUBGRADE, MIN. SIZE (6) INCHES DEPTH).

6. DAMAGE TO TURF SHALL BE REPAIRED BY CONTRACTOR, IE RUTS FILLED WITH CLEAN SOIL, COMPACTED TO MATCH SURROUNDING GRADES, EXCESS SOIL, ROCK, ETC., SHALL BE REMOVED TO LEAVE THE SITE CLEAN.

7. ALL PLANT MATERIAL, OTHER THAN TREES, SHALL CONFORM TO GRADING, TYPE, ETC., AS SET FORTH IN THE AMERICA STANDARD FOR NURSERY STOCK BY THE AMERICAN ASSOCIATION OF NURSERYMEN. ALL TREES SHALL CONFORM TO THE CURRENT ARIZONA NURSERY ASSOCIATION TREE SPECIFICATIONS AND MAG SPEC 795.7. SHOULD ANY CONFLICTS IN THE SPECIFICATION OCCUR, THE ARIZONA NURSERY ASSOCIATION SPECIFICATIONS SHALL PREVAIL.

8. CITY RESERVES THE RIGHT TO INSPECT SHRUBS AND CONTAINER TREES FOR CONDITION OF ROOTBALLS. FOR ANY SUCH INSPECTIONS WHICH MAY DESTROY ROOTBALL, CONTRACTOR SHALL SUPPLY ADDITIONAL PLANT AT NO COST TO CITY.

9. PLANT PITS SHALL BE INSPECTED BY CITY PRIOR TO PLANTING BY THE CONTRACTOR BY REQUESTING AN INSPECTION 48 HOURS IN ADVANCE.

10. ROUGH AND FINE GRADING TO ESTABLISH UNIFORM SMOOTH GRADE IS INCLUDED IN THIS PROJECT.

11. SOIL TEST FOR FERTILITY AND ADDITIVE RECOMMENDATIONS (FOR TURF AND ORNAMENTALS) SHALL BE COMPLETED BY CONTRACTOR TO DETERMINE IF ADDITIVES ARE REQUIRED. CONTRACTOR SHALL PROVIDE COPY OF SOIL TEST RESULTS FOR REVIEW AND APPROVAL TO ENGINEERING INSPECTOR AT LEAST SEVEN (7) DAYS PRIOR TO ANTICIPATED PLANTING. AFTER APPROVAL BY THE CITY, THE CONTRACTOR SHALL PROVIDE AND INCORPORATE AND ADDITIVES REQUIRED PRIOR TO OR AT TIME OF PLANTING.
12. PLANT PIT SOIL MIXTURE SHALL CONSIST OF FOUR AND ONE-HALF PARTS NATURE FERTILE, FRIABLE SOIL AND ONE PART HUMUS BY VOLUME, THOROUGHLY MIXED PRIOR TO BACKFILLING IN PITS. BACKFILLING SHALL BE IN 6" LIFTS WITH EACH LIFT WATER SETTLED WITHOUT PUDDLING.

13. CONTRACTOR SHALL STAKE TREE AND SHRUB LOCATIONS FOR 5-GALLON PLANTS AND LARGER. STAKES SHALL BE MARKED WITH PLANT NAME OR PLANT LEGEND ITEM NUMBER FORM PLANS.

14. ALL EXISTING (GAS, ELECTRIC, WATER, ETC.,) COVERS AND BOXES SHALL REMAIN UNCOVERED. CONTRACTOR TO ADJUST TO FINAL GRADE AS NECESSARY.

15. THE CONTRACTOR SHALL INSTALL WATER METER PROVIDED BY THE CITY OF MESA. THE CONTRACTOR SHALL PROVIDE ALL MATERIALS INCLUDING ALL APPURTENANCES AND LABOR NECESSARY TO INSTALL THE COMPLETE AUTOMATIC SPRINKLER SYSTEM FROM THE METER (WATER USAGE CHARGES SHALL BE PAID BY CONTRACTOR UNTIL PROJECT FINAL ACCEPTANCE BY CITY OF MESA). CONTRACTOR SHALL ORDER METER FROM DEVELOPMENT SERVICES.

16. THE CONTRACTOR SHALL BE RESPONSIBLE FOR LOCATION THE UNDERGROUND SPRINKLER SYSTEM IN ADVANCE OF CONSTRUCTION. THE SPRINKLER SYSTEM LOCATIONS NOTED ON PLANS ARE FOR REFERENCE ONLY.

17. CONTRACTOR TO VERIFY DEPTH OF ALL INLET STRUCTURES AND SPRINKLER SYSTEMS PRIOR TO TRENCHING FOR LOW-FLOW CHANNEL.

18. CONTRACTOR TO PROVIDE PUMPING WITHIN FIVE (5) DAYS AFTER THE NOTICE TO PROCEED IS GIVE AS REQUIRED TO DRY THE AREA SUFFICIENTLY TO BEGIN CONSTRUCTION.

19. CONTRACTOR SHALL ARRANGE FOR SPRINKLER SYSTEM SHUT DOWN DURING CONSTRUCTION BY CONTACTING THE ENGINEERING INSPECTOR.

20. NO ROCKS LARGER THAN 1" IN DIAMETER SHALL BE ALLOWED IN THE TOP SIZE (6) INCHES OF TOPSOIL WHERE TURF ESTABLISHMENT IS SPECIFIED. ROCK REMOVALS AS NECESSARY IS INCLUDED IN THIS PROJECT.

21. WHERE CALICHE IS ENCOUNTERED IN PLANT PITS, DEPTH AND WIDTH OF PIT SHALL BE INCREASED BY ONE-THIRD (1/3) OVER SPECIFICATION, AND A LIQUID PENETRATION "AL-KALICHE" OR EQUAL SHALL BE INCORPORATED FOR EACH PIT PER MANUFACTURERS RECOMMENDATIONS.

22. PROJECT RECORD DRAWINGS FOR IRRIGATION SYSTEM:
A) MAINTAIN ON SITE AND SEPARATE FROM DOCUMENTS USED FOR CONSTRUCTION ,ONE COMPLETE SET OF CONTACT DOCUMENTS AS PROJECT RECORDS DOCUMENTS. KEEP DOCUMENT CURRENT. DON NOT PERMANENTLY COVER WORK UNTIL AS-BUILT INFORMATION IS RECORDED.
B) RECORD PIPE AND WIRING NETWORK ALTERATIONS. RECORD WORK WHICH IS INSTALLED DIFFERENTLY THAN SHOWN ON THE CONSTRUCTION DRAWINGS. RECORD ACCURATE REFERENCE DIMENSIONS, MEASURED FROM AT LEAST 2 PERMANENT REFERENCE POINT OF EACH IRRIGATION SYSTEM VALVE , EACH BACKFLOW PREVENTION DEVICE, EACH CONTROLLER OR CONTROL UNIT, EACH SLEEVE END, EACH STU-OUT FOR FUTURE PIPE OR WIRING CONNECTIONS, AND OTHER IRRIGATION COMPONENTS ENCLOSED WITHIN A VALVE BOX.

23. FOR PARKS RETENTION BASINS: CONTRACTOR SHALL INSTALL DECOMPOSED GRANITE TO A ROLLED DEPTH OF TWO (2) INCHES. DECOMPOSED GRANITE SHALL BE 1/2" MINUS WITH THE COLOR AS SPECIFIED ON THE PLANS. PRE-EMERGENT HERBICIDE SHALL BE APPLIED BEFORE AND AFTER PLACEMENT OF DECOMPOSED GRANITE PER THE MANUFACTURES RECOMMENDATIONS. PRE-EMERGENT HERBICIDE SHALL BE SURFALAN, DACTHAL, OR APPROVED EQUAL. NOT MORE THAN 8% OF DECOMPOSED GRANITE SHALL PASS THROUGH A #200 MESH SCREEN, 15% THROUGH A #40 MESH SCREEN, 98% THROUGH A #4 MESH SCREEN, AND 100% SHALL PASS THROUGH A 1/2" MESH SCREEN. SAMPLE TO BE PROVIDED FOR CITY REVIEW AND APPROVAL.

24. FOR STREET LANDSCAPE PROJECT: CONTRACTOR SHALL INSTALL DECOMPOSED GRANITE AS FOLLOWS:
A) DECOMPOSED GRANITE GROUND COVER SHALL BE 1/2" SIZE SCREENED AND WASHED.
B) PLACE AND ROLL TO TWO (2) INCH TOTAL DEPTH OVER 85% COMPACTED SUB-GRADE.
C) PRE-EMERGENT HERBICIDE SURFLAN, DACTHAL, OR APPROVED EQUAL SHALL BE APPLIED BEFORE AND AFTER GRANITE PLACEMENT.
D) DECOMPOSED GRANITE SAMPLE SHALL BE PROVIDED IN A RIGID PLASTIC CONTAINER FOR CITY REVIEW AND APPROVAL.

25. RESTORE ALL EXISTING LANDSCAPE IRRIGATION SYSTEMS, COMPONENTS, AND LANDSCAPE AREAS IMPACTED BY ANY WORK UNDER THIS CONTACT. RESTORE ALL EXISTING IRRIGATION AND LANDSCAPE IN ACCORDANCE WITH THE LANDSCAPE RESTORATION NOTES INDICATED WITHIN THESE DOCUMENTS. AT A MINIMUM, ALL RESTORATION SHALL BE IN ACCORDANCE WITH MAG SPECIFICATION 107.9 - PROTECTION AND RESTORATION OF PROPERTY AND LANDSCAPE . ALL RESTORATION WORK SHALL BE COMPETED TO THE SATISFACTION OF THE CITY OF MESA ENGINEER.

26. ALL RESTORATION WORK SHALL BE COMPLETED IN ACCORDANCE WIT THE DETAILS PROVIDED.

27. REFER TO LANDSCAPE PLANTING SHEETS AND ENGINEERING DRAWINGS FOR ADDITIONAL RESTORATION NOTES AND REQUIRED COORDINATION.

SHEET INDEX

SHEET	TITLE
L0.1	LANDSCAPE COVER
L1.0	LANDSCAPE PLAN
L2.0	IRRIGATION PLAN
L3.0	LANDSCAPE DETAILS
L4.0-L4.1	IRRIGATION DETAILS

OWNER CONTACT

WHATABRANDS REAL ESTATE
300 CONCORD PLAZA DRIVE
SAN ANTONIO, TEXAS 78216
CLINT SAAVADRA
210-476-6181

LANDSCAPE ARCHITECT

HARRINGTON PLANNING + DESIGN (HP+D)
1921 S. ALMA SCHOOL ROAD, SUITE 204
MESA, ARIZONA 85210
JASON HARRINGTON, RLA, ASLA, ASIC, APWA
(480) 250-0116
JASON@HARRINGTONPLANNINGDESIGN.COM

SITE ADDRESS

5427 S. POWER ROAD
MESA, ARIZONA 85212
APN: 304-37-018C

VICINITY MAP

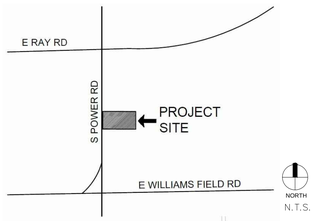

ARIZONA BLUESTAKE CENTER
CALL TWO WORKING DAYS BEFORE YOU DIG
1.800.782.5348

HARRINGTON PLANNING + DESIGN
1921 S Alma School Rd, Suite 204
Mesa, Arizona 85210
Tel: 480-250-0116
www.HarringtonPlanningDesign.com

LANDSCAPE ARCHITECT
REGISTERED
44161
JASON E. HARRINGTON
07.30.21
ARIZONA U.S.A.

WHAT A BURGER
RESTAURANT DEVELOPMENT

5427 S. POWER ROAD
Mesa, Arizona 85212

REV.	COMMENT	DATE

ISSUE	DATE
Permit Submittal	07.30.21
Preliminary Submittal	07.14.21

LANDSCAPE PACKAGE

July 30, 2021

DRAWN BY:	TW
CHECK BY:	JEH
PROJ. NO.:	2021-021
CASE NO.:	-

CASE NO.: -

LANDSCAPE COVER

L0.1

This drawing is an instrument of service and the property of Harrington Planning + Design and shall be restricted to the original site for which it was prepared and publication therefore is expressly limited to such use.
Reuse, reproduction by any method in part or in whole is prohibited without HP+D written consent.

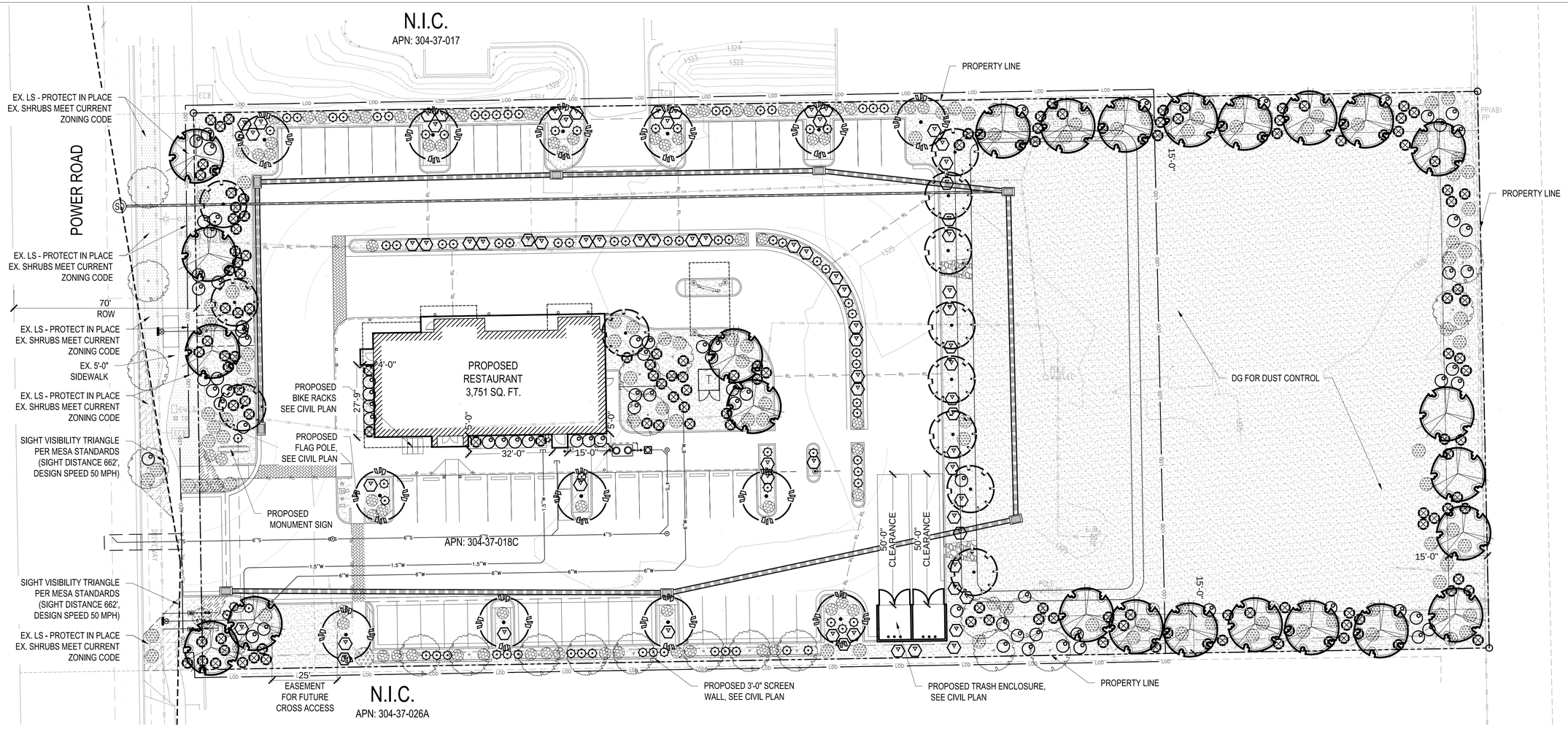

PLANTING MATERIAL LEGEND

TREES	SIZE	NOTES	QTY
Pistacia atlantica x integerrima 'Red Push" Pistache Caliper Size: 1.5"	24" Box H 9' W 3.5'	*ADWR	25
Acacia salicina Willow Leaf Acacia Caliper Size: 1.5"	24" Box H 8' W 3.5'	Multi *ADWR	13
Chilopsis linearis Desert Willow Caliper Size: 2.0"	36" Box H 9' W 6'	*ADWR	12
Vitex agnus-castus Chaste Tree Caliper Size: 1.5"	24" Box H 7' W 4'	*ADWR	21
GROUNDCOVERS			**QTY**
Lantana montevidensis Trailing Lantana 'Purple'	5 Gallon	*ADWR	114
Convolvulus mauritanicus Ground Morning Glory	5 Gallon	*ADWR	64
SHRUBS / ACCENTS			**QTY**
Ruellia californica Baja Ruellia	5 Gallon	*ADWR	72
Eremophila hygrophana Blue Bells	5 Gallon	*ADWR	142
Muhlenbergia rigens Deer Grass	5 Gallon	*ADWR	76
Hesperaloe parviflora Red Yucca	5 Gallon	*ADWR	85
LANDSCAPE MATERIALS			
Decomposed Granite. 3/4" minus, Express Gold 2" deep in planting areas per plan.			60,100 sq.ft.

*ADWR = Arizona Department of Water Resources Approved Low-Water Use Plant

LANDSCAPE SITE NOTES

1. UNAUTHORIZED CHANGES TO DRAWINGS - THE LANDSCAPE ARCHITECT SHALL NOT BE RESPONSIBLE FOR, OR LIABLE FOR, UNAUTHORIZED CHANGES TO OR USE OF DRAWINGS. CHANGES TO THE PLANS MUST BE IN WRITING AND MUST BE APPROVED BY LANDSCAPE ARCHITECT PRIOR TO COMMENCEMENT OF WORK.
2. OWNER SHALL OBTAIN AND PAY FOR ONLY CITY OF MESA ISSUED PERMITS TO COMPLETE WORK. CONTRACTOR SHALL PAY FOR ALL OTHER PERMITS.
3. NOTIFY LANDSCAPE ARCHITECT AT LEAST 4 WORKING DAYS IN ADVANCE PRIOR TO REQUIRED OR DESIRED INSPECTION AT (480) 250-0116.
4. STAKE SITE MATERIALS LOCATION AND RECEIVE LANDSCAPE ARCHITECT APPROVAL PRIOR TO INSTALLATION.

CITY OF MESA LANDSCAPE CALCULATIONS

	REQUIRED	PROVIDED
PERIMETER LANDSCAPE PER 11-33-3 MESA Z/O ARTERIAL STREET - U DESIGNATE 1 TREE 6 SHRUBS PER 25 FEET OF STREET FRONTAGE	7 TREES / 42 SHRUBS	POWER ROAD: 180' 10 TREES PROVIDED 98 SHRUBS PROVIDED
SHADE COVERAGE AREA	50% OF LS AREA	75% COVERAGE
INTERIOR PARKING LANDSCAPE PER 11-33-4 MESA Z/O: 1 TREE / 3 SHRUB PER PLANTER ISLAND	13 TREES / 39 SHRUBS	13 TREES / 70 SHRUB PROVIDED
FOUNDATION LANDSCAPE PER 11-33-5 MESA Z/O* 1 TREE / 50 LF BUILDING FACE	5 TREES	263 FT TOTAL EDGE = 5 TREES 5 TREES PROVIDED
15' WIDE PERIMETER LANDSCAPE BUFFER PER 11-33-3 MESA Z/O ARTERIAL 3 TREES AND 20 SHRUBS PER 100 FEET	NORTHERN BOUNDARY 15 TREES AND 99 SHRUBS SOUTHERN BOUNDARY 15 TREES AND 99 SHRUBS EASTERN BOUNDARY 7 TREES AND 43 SHRUBS	NORTHERN BOUNDARY 16 TREES AND 148 SHRUBS SOUTHERN BOUNDARY 25 TREES AND 117 SHRUBS EASTERN BOUNDARY 7 TREES AND 46 SHRUBS

HARRINGTON PLANNING + DESIGN
1921 S Alma School Rd, Suite 204
Mesa, Arizona 85210
Tel: 480-250-0116
www.HarringtonPlanningDesign.com

REGISTERED LANDSCAPE ARCHITECT CERTIFICATE NO. 44161 JASON E. HARRINGTON Date signed 07.30.21 ARIZONA U.S.A.

WHAT A BURGER RESTAURANT DEVELOPMENT

5427 S. POWER ROAD
Mesa, Arizona 85212

REV.	COMMENT	DATE

ISSUE	DATE
Permit Submittal	07.30.21
Preliminary Submittal	07.14.21

LANDSCAPE PACKAGE

July 30, 2021

DRAWN BY:	TW
CHECK BY:	JEH
PROJ. NO.:	2021-021
CASE NO.:	-

NORTH

0 10 20 40

LANDSCAPE PLAN

L1.0

2 of 6

CASE NO.: -

ARIZONA BLUESTAKE CENTER
CALL TWO WORKING DAYS BEFORE YOU DIG
1.800.782.5348

This drawing is an instrument of service and the property of Harrington Planning + Design and shall be restricted to the original site for which it was prepared and publication therefore is expressly limited to such use.
Reuse, reproduction by any method in part or in whole is prohibited without HP+D written consent.

WHATABURGER

PRELIMINARY GRADING AND DRAINAGE PLAN

5427 S. POWER ROAD, MESA AZ 85212

DEVELOPER
WHATABRANDS REAL ESTATE
300 CONCORD PLAZA DRIVE
SAN ANTONIO, TEXAS 78216
PHONE: 210-476-6181
ATTN: CLINT SAAVADRA

OWNER
GS TRUST/5427 S POWER LLC
5427 S. SETON DR, GILBERT,
AZ 85259
PHONE: 505-980-1991

CIVIL ENGINEER
SUSTAINABILITY ENGINEERING GROUP
8280 E. GELDING DR., SUITE 101
SCOTTSDALE, ARIZONA 85260
PHONE: 480-588-7226
ATTN: ALI FAKIH

BASIS OF BEARING

THE BASIS OF BEARING AND ALL MONUMENTATION SHOWN HEREON IS BASED ON THE WEST LINE OF THE NORTHWEST QUARTER OF SECTION 30, T1S, R7E, USING A BEARING OF SOUTH 00 DEGREES 56 MINUTES 43 SECONDS EAST, AS SHOWN ON PLSS RECORD OF SURVEY, RECORD IN BOOK 609, PAGE 29, MARICOPA COUNTY RECORDS.

BENCHMARK

BENCHMARK IS A CITY OF MESA BRASS TAG NORTHEAST CORNER TOP OF CURB AT THE INTERSECTION OF POWER ROAD AND LOOP 202 FREEWAY.

ELEVATION: 1324.10' NAVD 88 (CITY OF MESA DATUM)

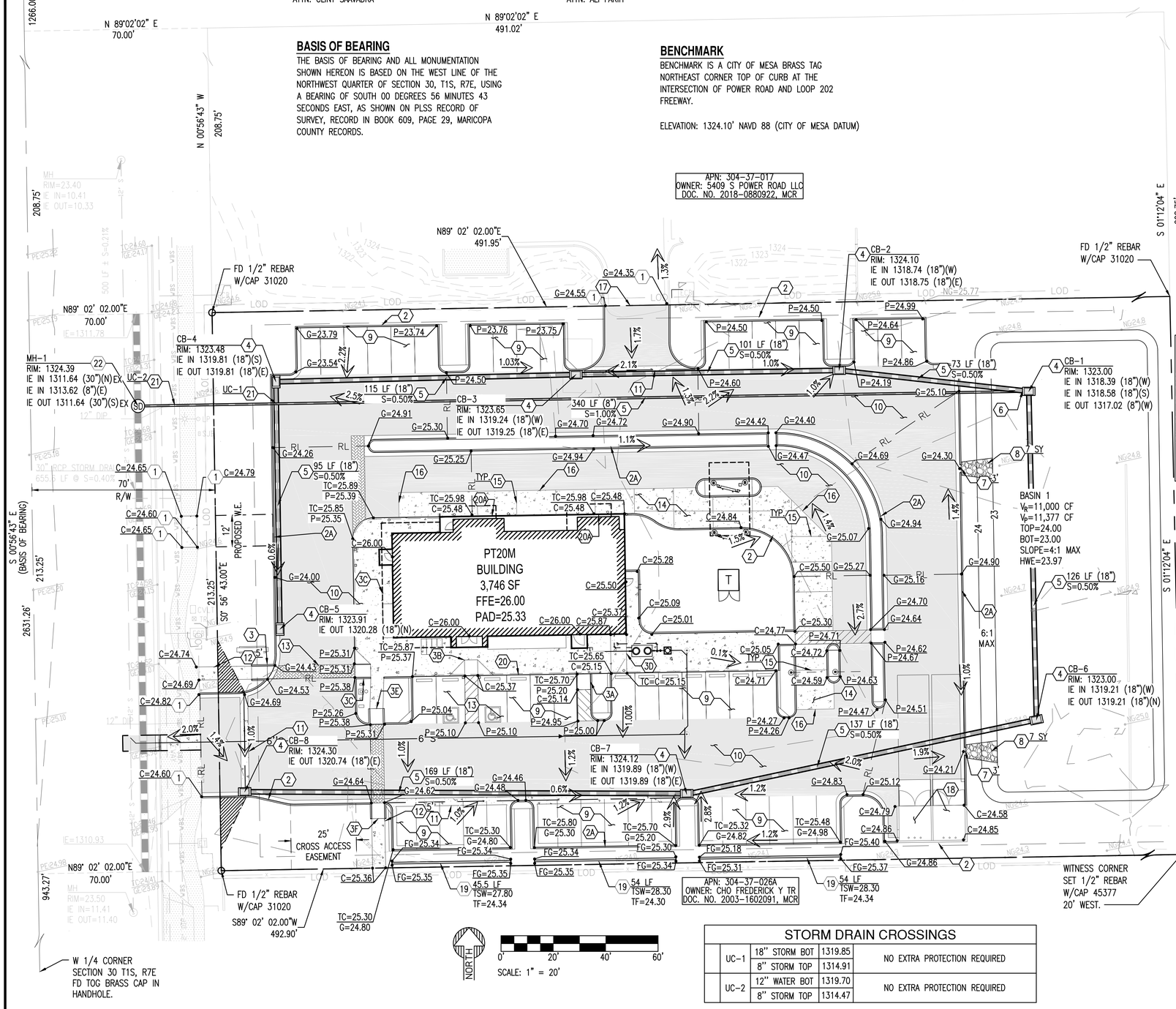

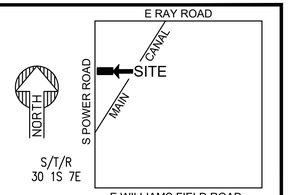

VICINITY MAP
N.T.S.

GRADING CONSTRUCTION KEY NOTES

1. MATCH EXISTING GRADE; CONTRACTOR TO VERIFY IN FIELD ALL GRADES PRIOR TO CONSTRUCTION ACTIVITIES AND CONTACT ENGINEER IN CASE OF ANY DISCREPANCIES.
2. CONSTRUCT 6" SINGLE CURB PER MAG STD. DET. 222 TYPE "B"
2A. CONSTRUCT 6" VERTICAL CURB AND GUTTER PER MAG STD. DET. 220 TYPE "A".
3. CONSTRUCT ADA RAMP PER DET. 1/C3.10.
3A. CONSTRUCT DELIVERY RAMP PER DET. 2/C3.10.
3B. CONSTRUCT ADA RAMP PER DET. 4/C3.10.
3C. CONSTRUCT ADA RAMP PER DET. 7/C3.10.
3D. CONSTRUCT DELIVERY RAMP PER DET. 8/C3.10.
3E. CONSTRUCT ADA RAMP PER DET. 16/C3.11.
3F. CONSTRUCT ADA RAMP PER DET. 17/C3.11.
4. FURNISH AND INSTALL CONCRETE CATCH BASIN TYPE "F" PER MAG STD. DET. 535.
5. FURNISH AND INSTALL HDPE DOUBLE WALL PIPE, CLASS 100; PIPE MATERIAL PER MAG SPECIFICATION 738. LENGTH, SIZE AND SLOPE PER PLAN.
6. FURNISH AND INSTALL ORIFICE PLATE IN THE CATCH BASIN BEFORE THE 8" BLEED OFF PIPE PER DET. 6/C3.10.
7. CONSTRUCT CURB OPENING PER DETAIL 10/C3.11; LENGTH PER PLAN.
8. FURNISH AND INSTALL RIP-RAP; D50 = 6", 12" DEPTH. DIMENSIONS PER PLAN. REFER TO DETAIL 3/C3.10.
9. CONSTRUCT LIGHT DUTY PAVEMENT PER DETAIL 11/C3.11.
10. CONSTRUCT HEAVY DUTY PAVEMENT PER DETAIL 11/C3.11.
11. CONCRETE VALLEY GUTTER PER MAG STD. DET. 240 MODIFIED TO 3' WIDE PER DET 5/C3.10.
12. CONSTRUCT CONCRETE SIDEWALK PER MAG STD. DET. 230. WIDTH PER PLAN.
13. CONSTRUCT PAVEMENT WITH 2% MAXIMUM SLOPE IN ANY DIRECTION AT ACCESSIBLE PARKING STALLS AND 2% MAXIMUM CROSS SLOPE AT ADA ACCESSIBLE ROUTE.
14. CONSTRUCT CONCRETE PAVEMENT PER DETAIL 12/C3.11.
15. CONSTRUCT CONTROL JOINT PER DET. 13/C3.11 & 14/C3.11.
16. PAVING TRANSITION PER DET. 15/C3.11.
17. TRANSITION TO EXISTING PAVEMENT PER DET. 9/C3.10.
18. TRASH ENCLOSURE. REFER TO C2.00
19. 3' SCREEN WALL. REFER TO SITE PLAN DET. 3/C2.10. LENGTH PER PLAN.
20. TURN DOWN SLAB. REFER TO WHATABURGER PT20M PLANS SECTION VIEW A2/S5.3. REFER TO DET 18/C3.12 FOR REFERENCE.
20A. TURN DOWN SLAB. REFER TO WHATABURGER PT20M PLANS SECTION VIEW A3/S5.3. REFER TO DET 19/C3.12 FOR REFERENCE.
21. CONTRACTOR TO VERIFY ALL INVERTS AND CLEARANCE OF UTILITIES PRIOR TO COMMENCING CONSTRUCTION.
22. FURNISH AND INSTALL PRECAST MANHOLE WITH 60-INCH BASE PER MAG STD. DET. 521 AND 522 WITH CONCRETE COLLAR PER MAG STD. DET. 422.; FRAME AND COVER PER MAG STD. DET. 423-2.

DRAINAGE STATEMENT

PROPOSED DEVELOPMENT IS A 3,751 S.F. RESTAURANT WITH DRIVE-THRU, WITH PARKING AND LANDSCAPE AREAS. LOT SIZE IS 105,003 S.F. (2.41 A.C.)

RETENTION VOLUME IS CALCULATED AS:

$V = (C_W*D*A)/12$
WHERE:
V = RUNOFF VOLUME FROM THE DRAINAGE AREA TO BE RETAINED (CF)
C_W = WEIGHTED RUNOFF COEFFICIENT (CALCULATED PER TABLE 8.1 EDSPM-MESA)
D = 2.18 INCHES (PER 100-YR, 2-HR NOAA ATLAS 14)
A = DRAIANGE AREA IN S.F.

C WEIGHTED CALCULATIONS
PER TABLE 8.1 OF MESA EDSPM
C = 0.50 @ PERVIOUS-DESERT LANDSCAPING
C= 0.95 @ IMPERVOIUS-PAVEMENT/ROOFTOPS

BASIN 1
PERVIOUS AREA =57,547
IMPERVIOUS AREA=47,445
C_W = (0.50*57,547+0.95*47,445)/105,003 = 0.70

BASIN 1 (OPEN RETENTION):

RETENTION VOLUME IS CALCULATED AS:
$V = (C_W*D*A)/12$
V= (0.70*2.18*105,003)/12 = 11,000 CF
VOLUME REQUIRED = 11,000 CF < 11,337 CF*

*REFER TO PLAN FOR PROPOSED RETENTION CALCULATIONS.

PROVIDED VOLUME IS CALCULATED AS:
$V = ((A1+A2)/2)*D$
WHERE:
V = PROVIDED VOLUME
A1 = AREA 1
A2 = AREA 2
D= DEPTH

PROVIDED VOLUME IS CALCULATED AS:
$V = ((10,259+12,495)/2)*1$
VOLUME PROVIDED =11,377 CF*

STORM WATER BLEED OF TO STREET

A RESTRICTOR PLATE WITH 1.2" ORIFICE WILL BLEED OFF THE RETENTION VOLUME AT A RATE OF 0.1079 CFS WITHIN 29.3 HOURS.

CONCLUSIONS
THE PROVIDED VOLUME EXCEEDS THE REQUIRED VOLUME.

STORM DRAIN CROSSINGS

UC-1	18" STORM BOT	1319.85	NO EXTRA PROTECTION REQUIRED
	8" STORM TOP	1314.91	
UC-2	12" WATER BOT	1319.70	NO EXTRA PROTECTION REQUIRED
	8" STORM TOP	1314.47	

EXISTING LEGEND:

EX. MAJOR CONTOURS; EX. MINOR CONTOURS; EX. SPOT ELEVATION; EASEMENT LINE AS NOTED; SEWER LINE; SEWER MANHOLE; WATER LINE; WATER VALVE; FIRE HYDRANT; STORM DRAIN LINE; STORM CATCH BASIN; STORM MANHOLE; GAS LINE; FENCE; SIGN; STREET LIGHT; TREE; ROAD CENTERLINE

PROPOSED GRADING LEGEND:

G=XX.XX GUTTER ELEVATION, TC = G+0.5'
P=XX.XX PAVEMENT ELEVATION
C=XX.XX CONCRETE ELEVATION
PROPERTY LINE; CURB AND GUTTER; VERTICAL CURB; RIDGELINE; LIMIT OF ONSITE CONSTRUCTION; MAJOR CONTOUR; MINOR CONTOUR; FLOW ARROW
CATCH BASIN; STORM PIPE; STORM MANHOLE; DRYWELL; RIP-RAP; CONCRETE PAVEMENT; HEAVY DUTY PAVEMENT; LIGHT DUTY PAVEMENT

PRELIMINARY NOT FOR CONSTRUCTION

SUSTAINABILITY ENGINEERING GROUP
8280 E. GELDING DRIVE SUITE 101, SCOTTSDALE, ARIZONA 85260
WWW: AZSEG.COM TEL. 480.588.7226 FAX 480.259.3534

WHATABURGER

Contact Arizona 811 at least two full working days before you begin excavation
ARIZONA811 Call 811 or click Arizona811.com

PROJECT: WHATABURGER
LOCATION: 5427 S. POWER ROAD, MESA, AZ

DRAWN	AF	07/08/2021
DESIGNED	JC, LR	07/08/2021
QC	SC	07/02/2021
FINAL QC	KZ	07/08/2021
PROJ. MGR.	AF	07/08/2021

DATE: 7/14/2021
ISSUED FOR: SITE PLAN/DESIGN REVIEW

REVISION NO.:	DATE:
1	
2	
3	
4	

JOB NO.: 201214

SHEET TITLE: **PRELIMINARY GRADING AND DRAINAGE PLAN**

PAGE NO.: 1 OF 4
SHEET NO.: C3.00

THIS DRAWING IS AN INSTRUMENT OF SERVICE AND THE PROPERTY OF SUSTAINABILITY ENGINEERING GROUP, AND SHALL REMAIN THEIR PROPERTY. THE USE OF THIS DRAWING SHALL BE RESTRICTED TO THE ORIGINAL SITE FOR WHICH IT IS PREPARED AND PUBLICATION THEREOF IS EXPRESSLY LIMITED TO SUCH USE.

LOCATION: Z:\SHARED\PROJECTS\WHATABURGER\MESA - SEC POWER & RAY - 201214\11 CAD (SEG)\11.4 CD'S\C0201214-C3.00.DWG SAVED BY: LAPTOP03 DATE: 7/14/2021

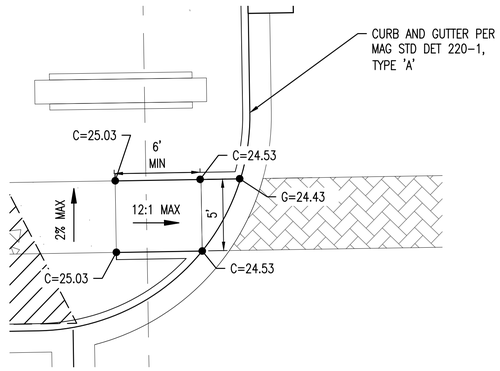

ADA ACCESSIBLE RAMP 1

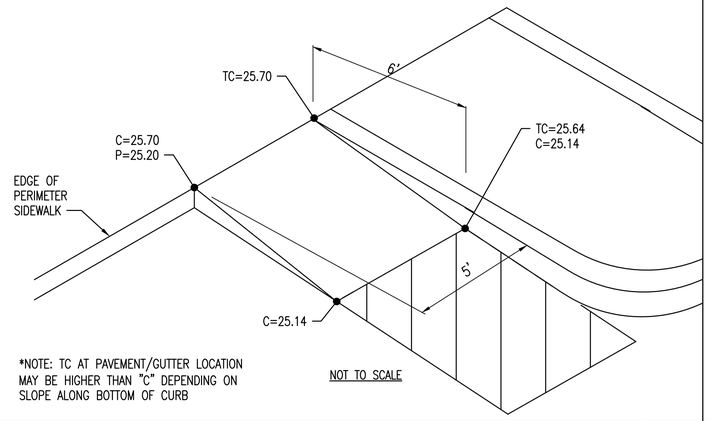

DELIVERY RAMP 2

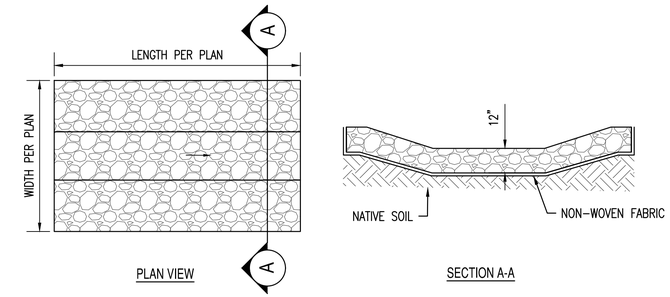

TYPICAL RIP RAP PAD 3

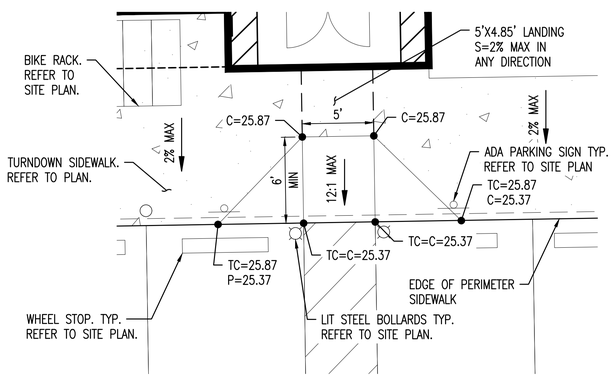

ADA ACCESSIBLE RAMP 4

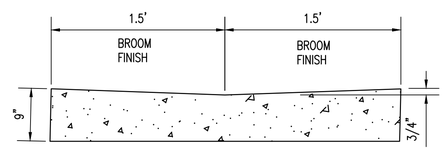

3' VALLEY GUTTER 5

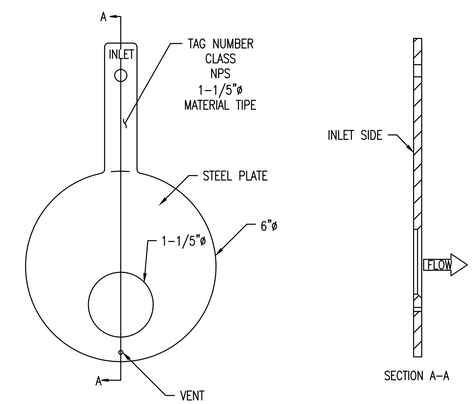

ORIFICE PLATE 6

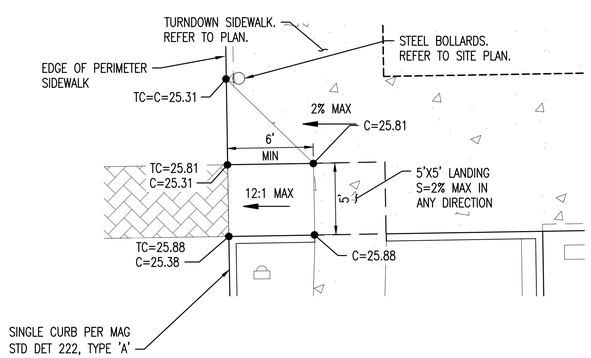

ADA ACCESSIBLE RAMP 7

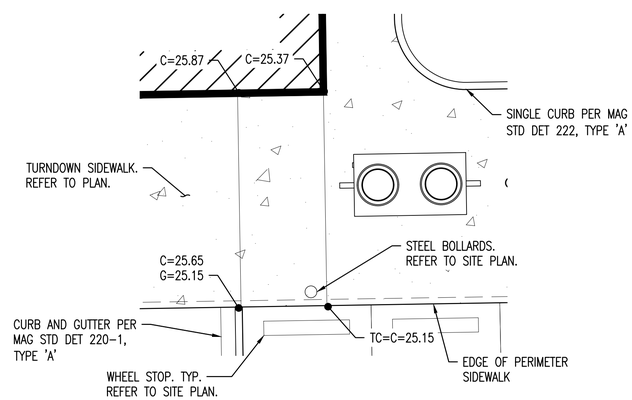

DELIVERY RAMP 8

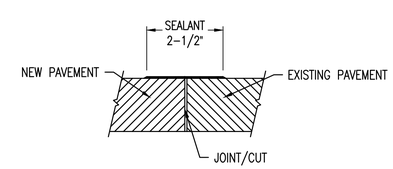

TRANSITION TO EXISTING PAVEMENT 9

PRELIMINARY
NOT FOR
CONSTRUCTION

SEG SUSTAINABILITY ENGINEERING GROUP
8280 E. GELDING DRIVE SUITE 101, SCOTTSDALE, ARIZONA 85260
WWW. AZSEG.COM TEL. 480.588.7226 FAX. 480.259.3534

WHATABURGER

Contact Arizona 811 at least two full working days before you begin excavation
ARIZONA811 Call 811 or click Arizona811.com

PROJECT
WHATABURGER

LOCATION
5427 S. POWER ROAD,
MESA, AZ

DRAWN	AF	07/08/2021
DESIGNED	JC, LR	07/08/2021
QC	SC	07/02/2021
FINAL QC	KZ	07/08/2021
PROJ. MGR.	AF	07/08/2021

DATE:
7/14/2021

ISSUED FOR:
SITE PLAN/DESIGN REVIEW

REVISION NO.:	DATE:
1	
2	
3	
4	

JOB NO.:
201214

SHEET TITLE:
PRELIMINARY GRADING AND DRAINAGE DETAILS

PAGE NO.: 2 OF 4

SHEET NO.: **C3.10**

THIS DRAWING IS AN INSTRUMENT OF SERVICE AND THE PROPERTY OF SUSTAINABILITY ENGINEERING GROUP, AND SHALL REMAIN THEIR PROPERTY. THE USE OF THIS DRAWING SHALL BE RESTRICTED TO THE ORIGINAL SITE FOR WHICH IT IS PREPARED AND PUBLICATION THEREOF IS EXPRESSLY LIMITED TO SUCH USE.

LOCATION: Z:\SHARED\PROJECTS\WHATABURGER\MESA - SEC POWER & RAY - 201214\11 CAD (SEG)\11.4 CD'S\C0201214-C3.00.DWG SAVED BY: LAPTOP03 DATE: 7/14/2021

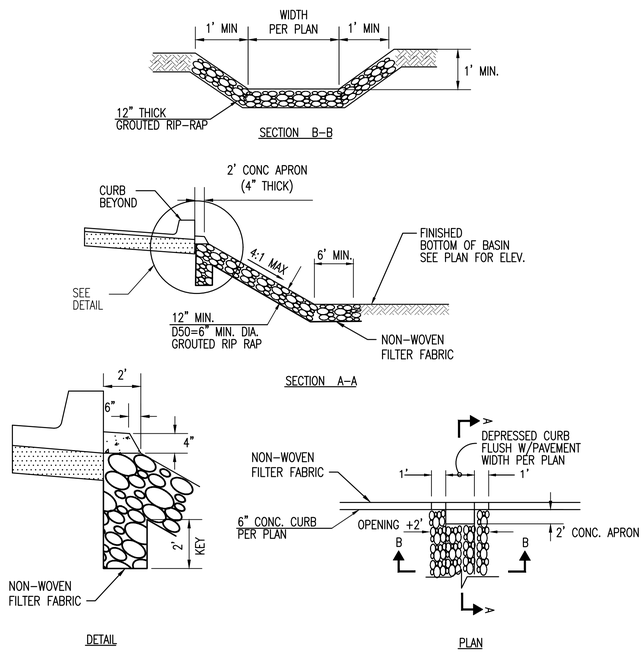

CURB OPENING RIPRAP 10

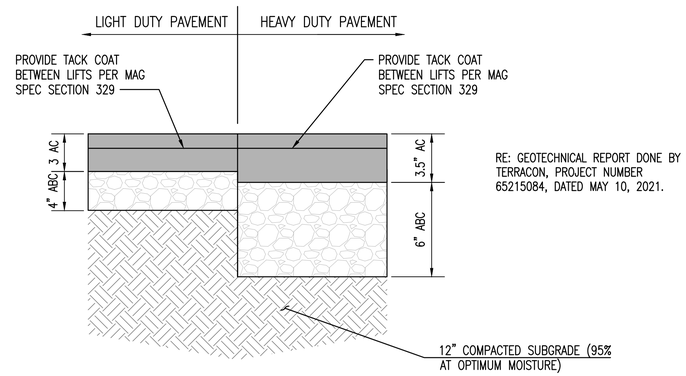

RE: GEOTECHNICAL REPORT DONE BY TERRACON, PROJECT NUMBER 65215084, DATED MAY 10, 2021.

ASPHALT PAVEMENT SECTION 11

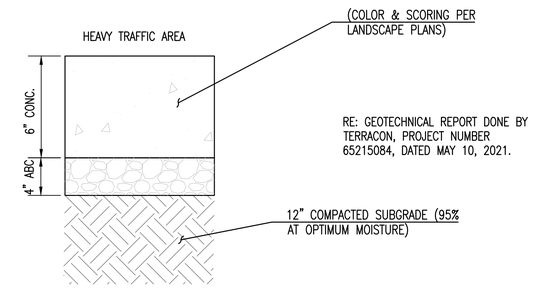

RE: GEOTECHNICAL REPORT DONE BY TERRACON, PROJECT NUMBER 65215084, DATED MAY 10, 2021.

CONCRETE PAVEMENT SECTION 12

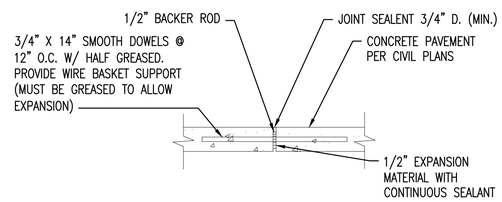

CONSTRUCTION JOINTS MUST BE APPROVED BY OWNER'S ENGINEER. PLACE WHEN CONTINUOUS POUR OPERATIONS ARE SUSPENDED FOR MORE THAN 30 MINUTES.

CONSTRUCTION JOINT 13

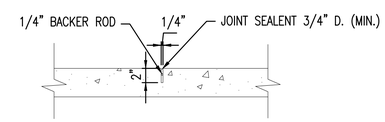

PLACE JOINTS AS SHOWN ON CONSTRUCTION IMPROVEMENT PLAN. SAWCUT WITHIN 4 HOURS IN HOT WEATHER AND WITHIN 12 HOURS IN COLD WEATHER AFTER THE SLAB HAS BEEN FINISHED IN AN AREA.

CONTROL JOINT 14

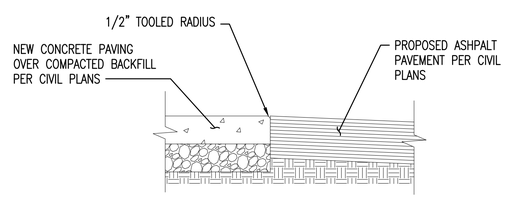

PLACE JOINTS AS SHOWN ON CONSTRUCTION IMPROVEMENT PLAN.

PAVING TRANSITION 15

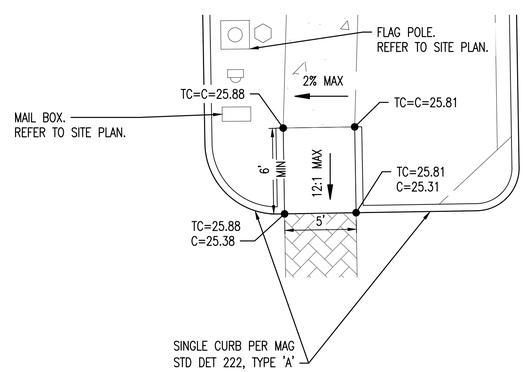

ADA ACCESSIBLE RAMP 16

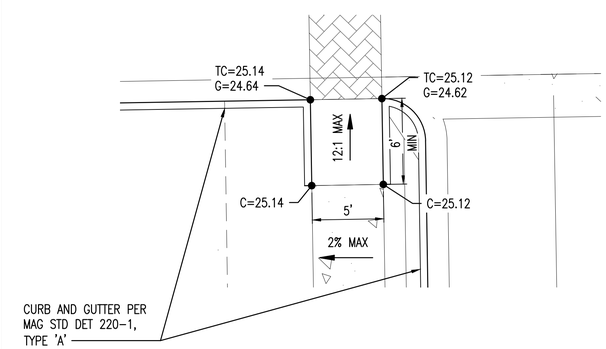

ADA ACCESSIBLE RAMP 17

PRELIMINARY
NOT FOR
CONSTRUCTION

SEG SUSTAINABILITY ENGINEERING GROUP
8280 E. GELDING DRIVE SUITE 101, SCOTTSDALE, ARIZONA 85260
WWW. AZSEG.COM TEL. 480.588.7226 FAX. 480.259.3534

WHATABURGER

Contact Arizona 811 at least two full working days before you begin excavation
ARIZONA811
Call 811 or click Arizona811.com

PROJECT
WHATABURGER

LOCATION
5427 S. POWER ROAD,
MESA, AZ

DRAWN	AF	07/08/2021
DESIGNED	JC, LR	07/08/2021
QC	SC	07/02/2021
FINAL QC	KZ	07/08/2021
PROJ. MGR.	AF	07/08/2021

DATE:
7/14/2021

ISSUED FOR:
SITE PLAN/DESIGN
REVIEW

REVISION NO.:	DATE:
1	
2	
3	
4	

JOB NO.:
201214

SHEET TITLE:
PRELIMINARY GRADING AND DRAINAGE DETAILS

PAGE NO.: 3 OF 4

SHEET NO.: **C3.11**

THIS DRAWING IS AN INSTRUMENT OF SERVICE AND THE PROPERTY OF SUSTAINABILITY ENGINEERING GROUP, AND SHALL REMAIN THEIR PROPERTY. THE USE OF THIS DRAWING SHALL BE RESTRICTED TO THE ORIGINAL SITE FOR WHICH IT IS PREPARED AND PUBLICATION THEREOF IS EXPRESSLY LIMITED TO SUCH USE.

LOCATION: Z:\SHARED\PROJECTS\WHATABURGER\MESA - SEC POWER & RAY - 201214\11 CAD (SEG)\11.4 CD'S\C0201214-C3.00.DWG SAVED BY: LAPTOP03 DATE: 7/14/2021

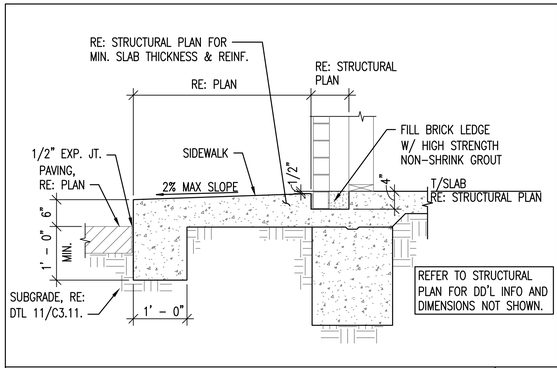

TURNDOWN SIDEWALK | 18

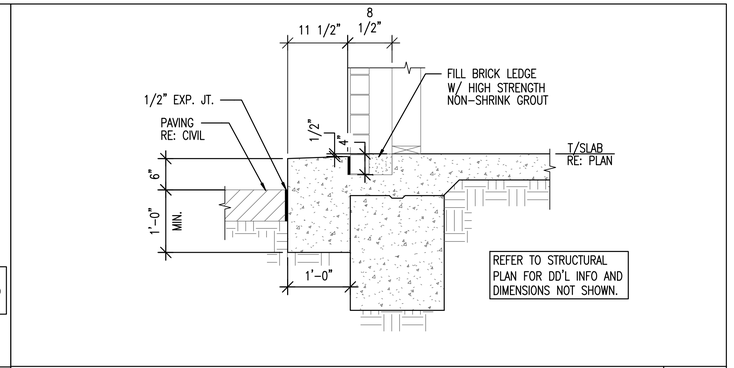

TURNDOWN SIDEWALK | 19

PRELIMINARY
NOT FOR
CONSTRUCTION

SEG SUSTAINABILITY ENGINEERING GROUP
8280 E. GELDING DRIVE SUITE 101, SCOTTSDALE, ARIZONA 85260
WWW: AZSEG.COM TEL. 480.588.7226 FAX 480.259.3534

WHATABURGER

Contact Arizona 811 at least two full working days before you begin excavation
ARIZONA811 BLUE STAKE, INC.
Call 811 or click Arizona811.com

PROJECT
WHATABURGER

LOCATION
5427 S. POWER ROAD,
MESA, AZ

DRAWN	AF	07/08/2021
DESIGNED	JC, LR	07/08/2021
QC	SC	07/02/2021
FINAL QC	KZ	07/08/2021
PROJ. MGR.	AF	07/08/2021

DATE:
7/14/2021

ISSUED FOR:
SITE PLAN/DESIGN
REVIEW

REVISION NO.:	DATE:
1	
2	
3	
4	

JOB NO.:
201214

SHEET TITLE:
PRELIMINARY GRADING AND DRAINAGE DETAILS

PAGE NO.: 4 OF 4

SHEET NO.: **C3.12**

THIS DRAWING IS AN INSTRUMENT OF SERVICE AND THE PROPERTY OF SUSTAINABILITY ENGINEERING GROUP, AND SHALL REMAIN THEIR PROPERTY. THE USE OF THIS DRAWING SHALL BE RESTRICTED TO THE ORIGINAL SITE FOR WHICH IT IS PREPARED AND PUBLICATION THEREOF IS EXPRESSLY LIMITED TO SUCH USE.

NOTES

1. EXTERIOR SIGNAGE TO BE PERMITED UNDER A SEPARATE SIGN PERMIT SET.

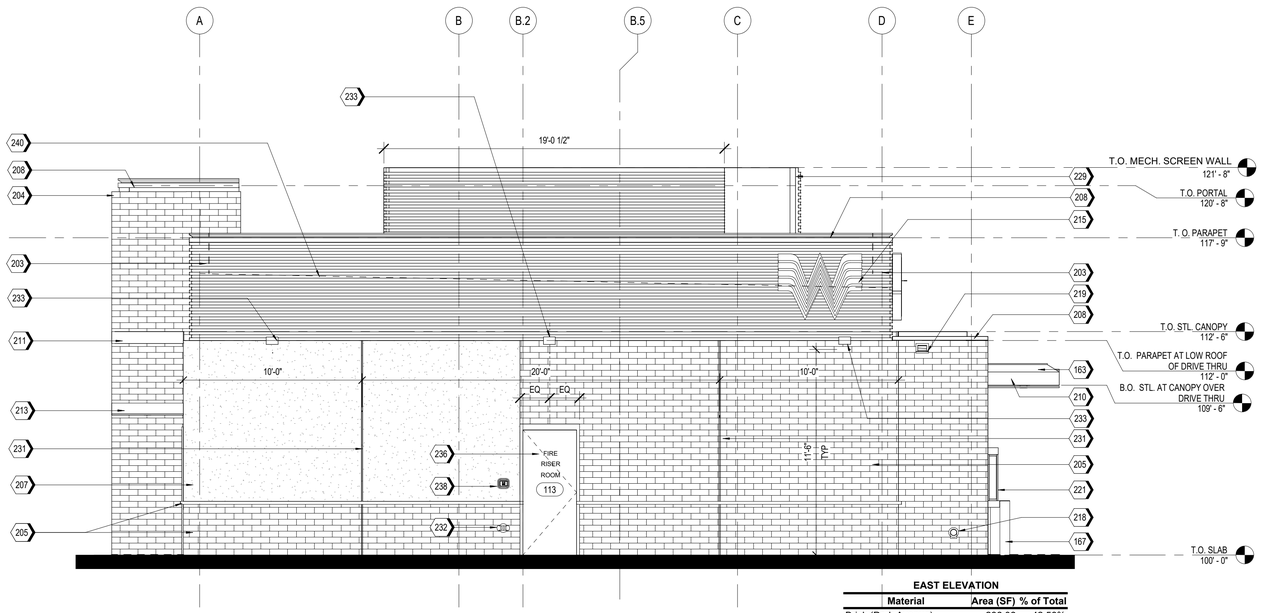

EAST ELEVATION

Material	Area (SF)	% of Total
Brick (Park Avenue)	286.06	42.58%
Stucco (Craftsman Brown)	169.49	25.23%
Metal Panel	216.22	32.19%
	671.77	100%

A2 EAST ELEVATION
1/4" = 1'-0"

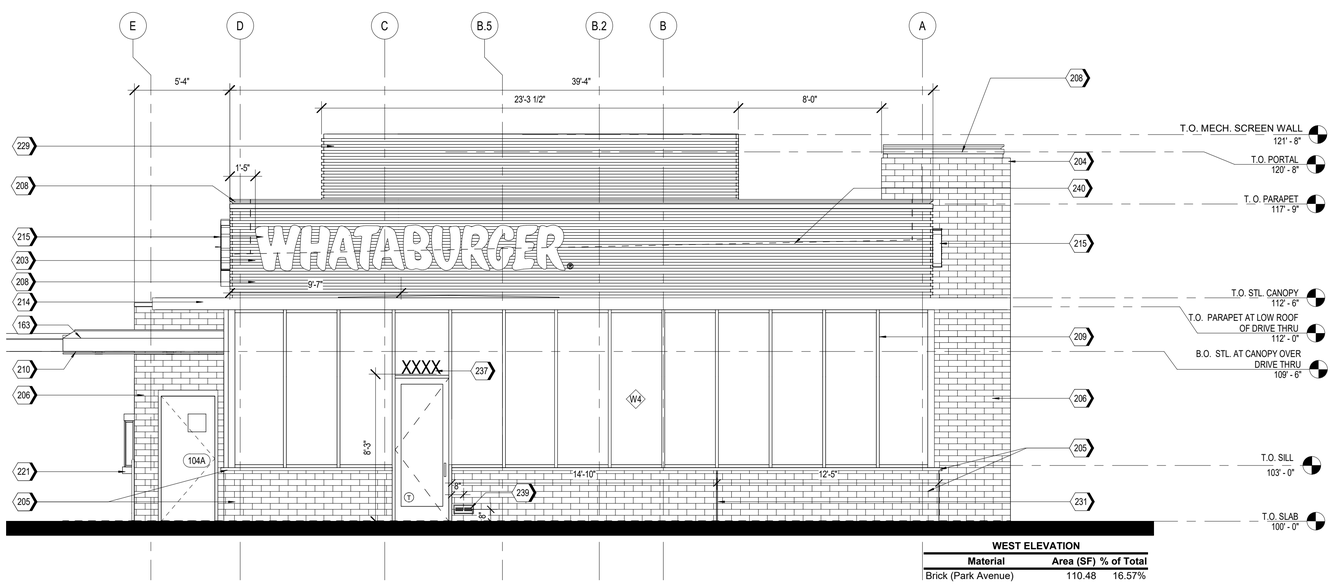

WEST ELEVATION

Material	Area (SF)	% of Total
Brick (Park Avenue)	110.48	16.57%
Metal Panel	196.13	29.41%
Storefront	360.16	54.02%
	666.77	100%

A1 WEST ELEVATION
1/4" = 1'-0"

KEYNOTES

163	TPO MEMBRANE ROOFING SYSTEM; RE: A1/A5.3
167	PIPE BOLLARDS: IDEAL SHEILD: URBAN BRONZE, PANTONE 2336 XGC. RE D3/S3.1
203	MP-01; PRE-FINISHED CORRUGATED METAL PANEL
204	MP-01; PRE-FINISHED CORRUGATED METAL PANEL
205	BR-01; BRICK VENEER PARK AVENUE
206	BR-02; BRICK VENEER DOESKIN
207	ST-01; STUCCO SW 2835 CRAFTSMAN BROWN
208	MC-01; PRE-FINISHED METAL COPING
209	SS-01; ALUMINUM STOREFRONT SYSTEM
210	PRE-FINISHED DRIVE-THRU CANOPY
211	ENTRY PORTAL CANOPY, PAINT PT-5
213	SERVICE DOOR CANOPY, PAINT PT-5
214	SUN SHADE CANOPY, SEE A6.9
215	ILLUMINATED SIGNAGE BY OTHERS, G.C. TO PROVIDE PLYWOOD BLOCKING AS NEEDED TO ATTACH SIGNAGE
218	DOWNSPOUT FROM ROOF DRAIN, LAMBS TONGUE DISCHARGE AT 12" ABOVE FINISH GRADE

KEYNOTES

219	OVERFLOW SCUPPER
221	DRIVE-THRU WINDOW
229	ROOF SCREEN WALL, RE: STRUCTURAL
231	MASONRY EXPANSION JOINT
232	FIRE DEPARTMENT CONNECTION, RE: FIRE PROTECTION
233	EXTERIOR LIGHT FIXTURE, RE: ELECTRICAL
234	RTU, RE: MECHANICAL
236	RISER ROOM SIGN (PER 2015 IFC CHAPTER 5 - APPROVED SIGNS SHALL BE CONSTRUCTED OF DURABLE MATERIALS, PERMANENTLY INSTALL AND READILY VISIBLE. LETTERS SHALL BE A MINIMUM OF 2" WITH A MINIMUM 3/8" STROKE, THE COLORS OF THE LETTERS SHALL BE CONTRASTING WITH RESPECT TO BACKGROUND.
237	BUILDING ADDRESS 6"HIGH WHITE VINYL NUMBERS WITH 1" STROKE, 10' A.F.G.
238	GENERAL CONTRACTOR SHALL PROVIDE A KNOX BOX PER JURISDICTIONAL REQUIREMENTS, LOCATION TO BE VERIFIED PRIOR TO CONSTRUCTION.
239	EMERGENCY STEP LIGHT. RE: ELECTRICAL
240	DASHED LINE INDICATES TOP OF DECK.

ALTERNATIVE MATERIALS FOR REFERENCE

GL-01 VISION GLASS
BASIS OF DESIGN: VIRACON VUE1-30
SHADING COEFFICIENT (SC): .20
EXTERIOR REFLECTION: 19%
SOLAR HEAT GAIN COEFFICIENT (SHGC): .18
U-FACTOR: .26

GL-03 OPAQUE GLASS
BASIS OF DESIGN: VIRACON V948

SS-01 STOREFRONT SYSTEM
BASIS OF DESIGN: OLDCASTLE
STYLE: FG-3000
FINISH: ALUMINUM

MP-01 METAL PANEL
MANUFACTURER: BERRIDGE
STYLE: MATRIX MX 1.0
ALUMINUM 0.05"
COLOR: LEAD-COTE

BR-01 BRICK
MANUFACTURER: ACME
STYLE: UTILITY
HERITAGE TEXTURE
BLEND DT114
SIZE: 4" x 4" x 12"
COLOR: PARK AVENUE
LIGHT GREY GROUT JOINT

BR-02 BRICK
MANUFACTURER: ACME
STYLE: UTILITY
HERITAGE TEXTURE
BLEND DT114
SIZE: 4" x 4" x 12"
COLOR: DOESKIN
LIGHT GREY GROUT JOINT

ST-01 STUCCO
MANUFACTURER: SHERWIN WILLIAMS
COLOR: SW 2835 CRAFTSMAN BROWN

MO-01 MORTAR
MANUFACTURER: AHI
COLOR: VANILLA -N

MC-01 METAL COPING
MANUFACTURER: BERRIDGE
STYLE: SHADOWLINE COPING
COLOR: LEAD-COTE TO MATCH MP-01

PT-5 PAINT
BASIS OF DESIGN:
MANUFACTURER: SHERWIN WILLIAMS
STYLE: SW 6277 SPECIAL GRAY
SHEEN: FLAT

MS-01 METAL SOFFIT
MANUFACTURER: BERRIDGE
STYLE: HS-8
FINISH: PAINT PT-5

SYM.	DATE	DESCRIPTION	BY

PROJECT: 201214
WHATABURGER PT20M
SEC POWER & RAY
5427 S. POWER RD.
CITY OF MESA, AZ.

SEG
8280 E. GELDING DR #101,
SCOTTSDALE, AZ 85280
WWW.AZSEG.COM
TEL. 480.588.7228

WHATABURGER
300 CONCORD PLAZA DR.
SAN ANTONIO, TEXAS.
210-476-6000 ZIP 78216.

THIS DRAWING IS THE PROPERTY OF WHATABURGUER, SAN ANTONIO, TEXAS AND MAY NOT BE USED OR REPRODUCED IN WHOLE OR IN PART WITHOUT THE EXPRESSED WRITTEN CONSENT OF WHATABURGUER

SHEET TITLE:
EXTERIOR ELEVATIONS

ISSUED FOR:
SITE PLAN / DESIGN REVIEW

UNIT NO.
DATE: 07/28/2021
SCALE: As indicated
DRAWN BY: EG
CHECKED BY:

SHEET NO:
A2.1

WHATABURGER

Z:\Shared\PROJECTS\Whataburger\Mesa - SEC Power & Ray - 201214\11 CAD (SEG)\11.4 CD's\Revit\Model\PT20M BRIDGE SET - ARCH.rvt

KEYNOTES

170	GUARDRAIL RE:B4/A0.1
203	MP-01; PRE-FINISHED CORRUGATED METAL PANEL
204	MP-01; PRE-FINISHED CORRUGATED METAL PANEL
205	BR-01; BRICK VENEER PARK AVENUE
206	BR-02; BRICK VENEER DOESKIN
207	ST-01; STUCCO SW 2835 CRAFTSMAN BROWN
208	MC-01; PRE-FINISHED METAL COPING
209	SS-01; ALUMINUM STOREFRONT SYSTEM
212	DRIVE-THRU DOOR CANOPY, PAINT PT-5
213	SERVICE DOOR CANOPY, PAINT PT-5
214	SUN SHADE CANOPY, SEE A6.9

KEYNOTES

215	ILLUMINATED SIGNAGE BY OTHERS, G.C. TO PROVIDE PLYWOOD BLOCKING AS NEEDED TO ATTACH SIGNAGE
218	DOWNSPOUT FROM ROOF DRAIN, LAMBS TONGUE DISCHARGE AT 12" ABOVE FINISH GRADE
219	OVERFLOW SCUPPER
221	DRIVE-THRU WINDOW
225	STAINLESS STEEL GREASE SHIELD W/ 2 1/2" HOLE THROUGH WALL FOR GREASE TANK
229	ROOF SCREEN WALL, RE: STRUCTURAL
231	MASONRY EXPANSION JOINT
232	FIRE DEPARTMENT CONNECTION, RE: FIRE PROTECTION
238	GENERAL CONTRACTOR SHALL PROVIDE A KNOX BOX PER JURISDICTIONAL REQUIREMENTS, LOCATION TO BE VERIFIED PRIOR TO CONSTRUCTION.
240	DASHED LINE INDICATES TOP OF DECK.

NOTES

1. EXTERIOR SIGNAGE TO BE PERMITED UNDER A SEPARATE SIGN PERMIT SET.

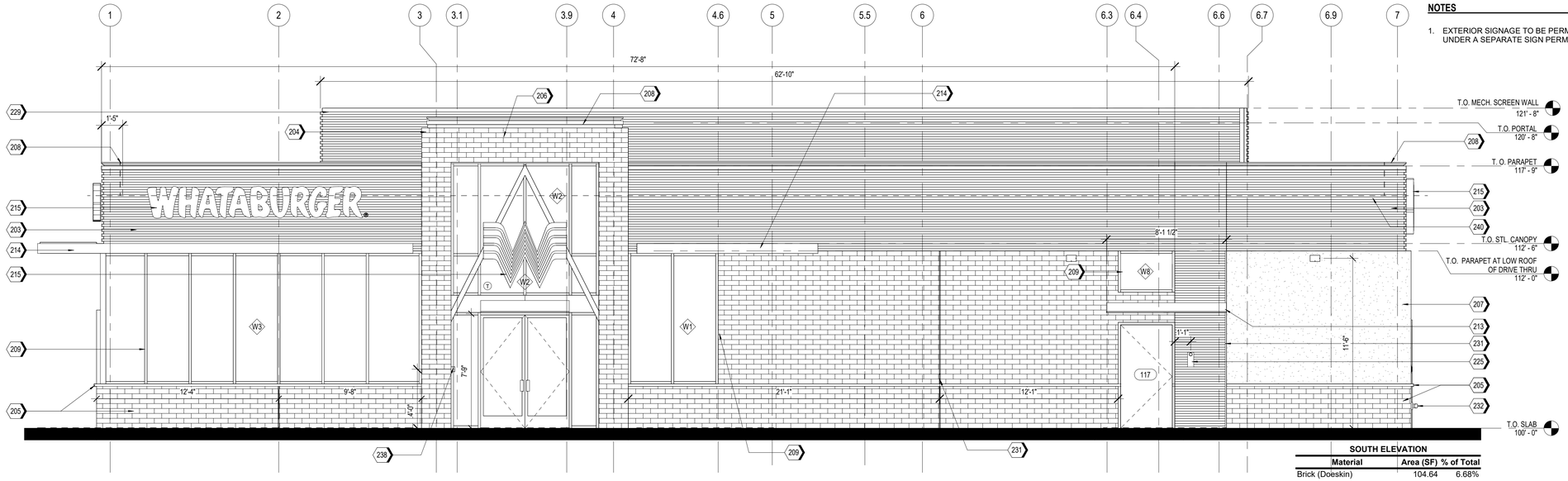

SOUTH ELEVATION

Material	Area (SF)	% of Total
Brick (Doeskin)	104.64	6.68%
Brick (Park Avenue)	454.32	29.00%
Stucco (Craftsman Brown)	112.37	7.17%
Metal Panel	458.86	29.29%
Storefront	436.56	27.86%
	1566.75	100%

A2 SOUTH ELEVATION
1/4" = 1'-0"

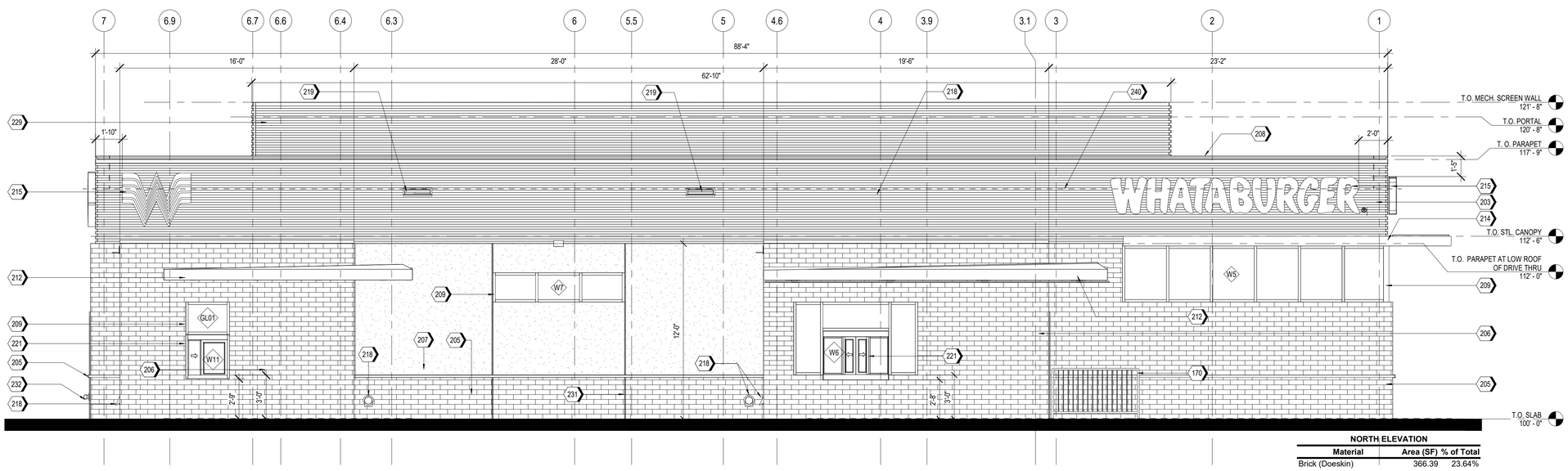

NORTH ELEVATION

Material	Area (SF)	% of Total
Brick (Doeskin)	366.39	23.64%
Brick (Park Avenue)	319.18	20.60%
Stucco (Craftsman Brown)	230.77	14.89%
Metal Panel	485.72	31.35%
Storefront	147.49	9.52%
	1549.55	100%

A1 NORTH ELEVATION
1/4" = 1'-0"

ALTERNATIVE MATERIALS FOR REFERENCE

GL-01 VISION GLASS
BASIS OF DESIGN: VIRACON VUE1-30
SHADING COEFFICIENT (SC): .20
EXTERIOR REFLECTION: 19%
SOLAR HEAT GAIN COEFFICIENT (SHGC): .18
U-FACTOR: .26

GL-03 OPAQUE GLASS
BASIS OF DESIGN: VIRACON V948

SS-01 STOREFRONT SYSTEM
BASIS OF DESIGN: OLDCASTLE
STYLE: FG-3000
FINISH: ALUMINUM

MP-01 METAL PANEL
MANUFACTURER: BERRIDGE
STYLE: MATRIX MX 1.0
ALUMINUM 0.05"
COLOR: LEAD-COTE

BR-01 BRICK
MANUFACTURER: ACME
STYLE: UTILITY
HERITAGE TEXTURE
BLEND DT114
SIZE: 4" x 4" x 12"
COLOR: PARK AVENUE
LIGHT GREY GROUT JOINT

BR-02 BRICK
MANUFACTURER: ACME
STYLE: UTILITY
HERITAGE TEXTURE
BLEND DT114
SIZE: 4" x 4" x 12"
COLOR: DOESKIN
LIGHT GREY GROUT JOINT

ST-01 STUCCO
MANUFACTURER: SHERWIN WILLIAMS
COLOR: SW 2835 CRAFTSMAN BROWN

MO-01 MORTAR
MANUFACTURER: AHI
COLOR: VANILLA -N

MC-01 METAL COPING
MANUFACTURER: BERRIDGE
STYLE: SHADOWLINE COPING
COLOR: LEAD-COTE TO MATCH MP-01

PT-5 PAINT
BASIS OF DESIGN:
MANUFACTURER: SHERWIN WILLIAMS
STYLE: SW 6277 SPECIAL GRAY
SHEEN: FLAT

MS-01 METAL SOFFIT
MANUFACTURER: BERRIDGE
STYLE: HS-8
FINISH: PAINT PT-5

SYM.	DATE	DESCRIPTION	BY

PROJECT: 201214
WHATABURGER PT20M
SEC POWER & RAY
5427 S. POWER RD.
CITY OF MESA, AZ.

SEG
8280 E. GELDING DR #101,
SCOTTSDALE, AZ 85280
WWW.AZSEG.COM
TEL. 480.588.7228

WHATABURGER
300 CONCORD PLAZA DR,
SAN ANTONIO, TEXAS.
210-476-6000 ZIP 78216.

THIS DRAWING IS THE PROPERTY OF WHATABURGUER, SAN ANTONIO, TEXAS AND MAY NOT BE USED OR REPRODUCED IN WHOLE OR IN PART WITHOUT THE EXPRESSED WRITTEN CONSENT OF WHATABURGUER

SHEET TITLE:
EXTERIOR ELEVATIONS

ISSUED FOR:
SITE PLAN / DESIGN REVIEW

UNIT NO.
DATE: 07/28/2021
SCALE: As indicated
DRAWN BY: EG
CHECKED BY:

SHEET NO:
A2.2

WHATABURGER

Z:\Shared\PROJECTS\Whataburger\Mesa - SEC Power & Ray - 201214\11 CAD (SEG)\11.4 CD's\Revit\Model\PT20M BRIDGE SET - ARCH.rvt

MATERIAL TEXTURES

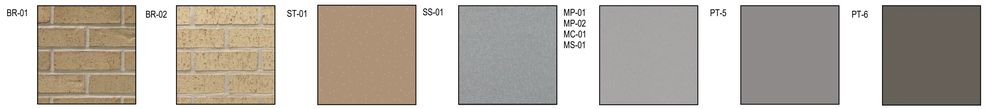

BRICK VENEER
ACME, PARK AVENUE
HERITAGE TEXTURE
BLEND: DTP114

BRICK VENEER
ACME, DOESKIN
HERITAGE TEXTURE
BLEND: DT114

STUCCO
MANUFACTURER: SHERWIN WILLIAMS
COLOR: SW 2830 CRAFTSMAN BROWN

STOREFRONT SYSTEM
BERRIDGE
COLOR: OLD CASTLE
STYLE: FG-3000
FINISH: ALUMINUM

METAL PANELS
BERRIDGE
COLOR: LEAD-COTE
STYLE: MATRIX MX 1.0
FINISH: ALUMINUM

PAINT
MANUFACTURER:
SHERWIN WILLIAMS
COLOR: SW 6277 SPECIAL GRAY

PAINT
MANUFACTURER: SHERWIN WILLIAMS
COLOR: SW 7048 URBAN BRONZE

NOTES

1. EXTERIOR SIGNAGE TO BE PERMITED UNDER A SEPARATE SIGN PERMIT SET.

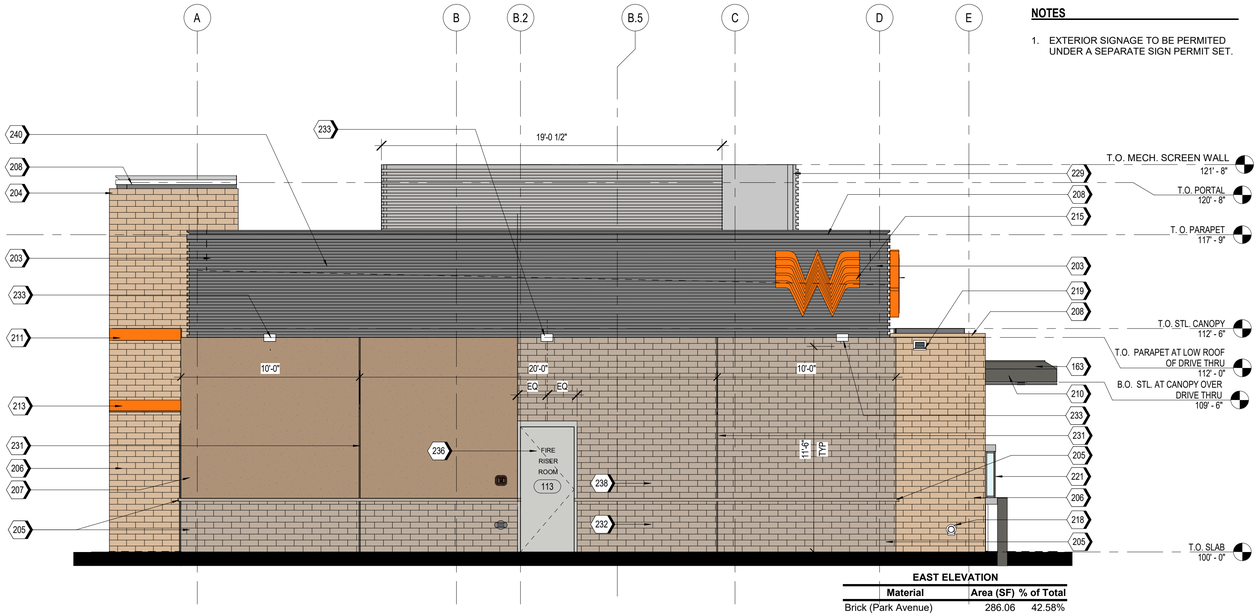

EAST ELEVATION

Material	Area (SF)	% of Total
Brick (Park Avenue)	286.06	42.58%
Stucco (Craftsman Brown)	169.49	25.23%
Metal Panel	216.22	32.19%
	671.77	100%

1 EAST ELEVATION
1/4" = 1'-0"

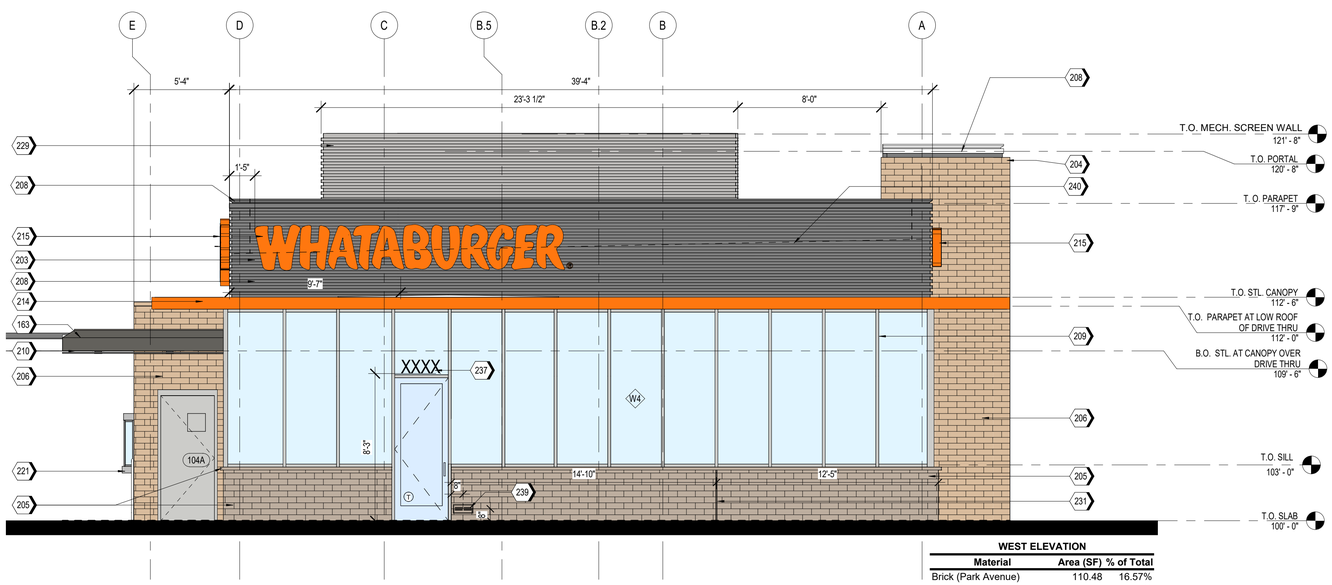

WEST ELEVATION

Material	Area (SF)	% of Total
Brick (Park Avenue)	110.48	16.57%
Metal Panel	196.13	29.41%
Storefront	360.16	54.02%
	666.77	100%

2 WEST ELEVATION
1/4" = 1'-0"

KEYNOTES

163	TPO MEMBRANE ROOFING SYSTEM; RE: A1/A5.3
203	MP-01; PRE-FINISHED CORRUGATED METAL PANEL
204	MP-01; PRE-FINISHED CORRUGATED METAL PANEL
205	BR-01; BRICK VENEER PARK AVENUE
206	BR-02; BRICK VENEER DOESKIN
207	ST-01; STUCCO SW 2835 CRAFTSMAN BROWN
208	MC-01; PRE-FINISHED METAL COPING
209	SS-01; ALUMINUM STOREFRONT SYSTEM
210	PRE-FINISHED DRIVE-THRU CANOPY
211	ENTRY PORTAL CANOPY, PAINT PT-5
213	SERVICE DOOR CANOPY, PAINT PT-5
214	SUN SHADE CANOPY, SEE A6.9
215	ILLUMINATED SIGNAGE BY OTHERS, G.C. TO PROVIDE PLYWOOD BLOCKING AS NEEDED TO ATTACH SIGNAGE
218	DOWNSPOUT FROM ROOF DRAIN, LAMBS TONGUE DISCHARGE AT 12" ABOVE FINISH GRADE
219	OVERFLOW SCUPPER
221	DRIVE-THRU WINDOW

KEYNOTES

229	ROOF SCREEN WALL, RE: STRUCTURAL
231	MASONRY EXPANSION JOINT
232	FIRE DEPARTMENT CONNECTION, RE: FIRE PROTECTION
233	EXTERIOR LIGHT FIXTURE, RE: ELECTRICAL
234	RTU, RE: MECHANICAL
236	RISER ROOM SIGN (PER 2015 IFC CHAPTER 5 - APPROVED SIGNS SHALL BE CONSTRUCTED OF DURABLE MATERIALS, PERMANENTLY INSTALL AND READILY VISIBLE. LETTERS SHALL BE A MINIMUM OF 2" WITH A MINIMUM 3/8" STROKE. THE COLORS OF THE LETTERS SHALL BE CONTRASTING WITH RESPECT TO BACKGROUND.
237	BUILDING ADDRESS 6"HIGH WHITE VINYL NUMBERS WITH 1" STROKE, 10' A.F.G.
238	GENERAL CONTRACTOR SHALL PROVIDE A KNOX BOX PER JURISDICTIONAL REQUIREMENTS, LOCATION TO BE VERIFIED PRIOR TO CONSTRUCTION.
239	EMERGENCY STEP LIGHT. RE: ELECTRICAL
240	DASHED LINE INDICATES TOP OF DECK.

ALTERNATIVE MATERIALS FOR REFERENCE

GL-01 VISION GLASS
BASIS OF DESIGN: VIRACON VUE1-30
SHADING COEFFICIENT (SC): .20
EXTERIOR REFLECTION: 19%
SOLAR HEAT GAIN COEFFICIENT (SHGC): .18
U-FACTOR: .26

GL-03 OPAQUE GLASS
BASIS OF DESIGN: VIRACON V948

SS-01 STOREFRONT SYSTEM
BASIS OF DESIGN: OLDCASTLE
STYLE: FG-3000
FINISH: ALUMINUM

MP-01 METAL PANEL
MANUFACTURER: BERRIDGE
STYLE: MATRIX MX 1.0
ALUMINUM 0.05"
COLOR: LEAD-COTE

BR-01 BRICK
MANUFACTURER: ACME
STYLE: UTILITY
HERITAGE TEXTURE
BLEND DT114
SIZE: 4" x 4" x 12"
COLOR: PARK AVENUE
LIGHT GREY GROUT JOINT

BR-02 BRICK
MANUFACTURER: ACME
STYLE: UTILITY
HERITAGE TEXTURE
BLEND DT114
SIZE: 4" x 4" x 12"
COLOR: DOESKIN
LIGHT GREY GROUT JOINT

ST-01 STUCCO
MANUFACTURER: SHERWIN WILLIAMS
COLOR: SW 2835 CRAFTSMAN BROWN

MO-01 MORTAR
MANUFACTURER: AHI
COLOR: VANILLA -N

MC-01 METAL COPING
MANUFACTURER: BERRIDGE
STYLE: SHADOWLINE COPING
COLOR: LEAD-COTE TO MATCH MP-01

PT-5 PAINT
BASIS OF DESIGN:
MANUFACTURER: SHERWIN WILLIAMS
STYLE: SW 6277 SPECIAL GRAY
SHEEN: FLAT

MS-01 METAL SOFFIT
MANUFACTURER: BERRIDGE
STYLE: HS-8
FINISH: PAINT PT-5

SYM.	DATE	DESCRIPTION	BY

PROJECT: 201214
WHATABURGER PT20M
SEC POWER & RAY
5427 S. POWER RD.
CITY OF MESA, AZ.

SEG
8280 E. GELDING DR #101,
SCOTTSDALE, AZ 85280
WWW.AZSEG.COM
TEL. 480.588.7228

WHATABURGER
300 CONCORD PLAZA DR.
SAN ANTONIO, TEXAS.
210-476-6000 ZIP 78216.

THIS DRAWING IS THE PROPERTY OF WHATABURGUER, SAN ANTONIO, TEXAS AND MAY NOT BE USED OR REPRODUCED IN WHOLE OR IN PART WITHOUT THE EXPRESSED WRITTEN CONSENT OF WHATABURGUER

SHEET TITLE:
EXTERIOR ELEVATIONS - COLORED
ISSUED FOR:
SITE PLAN / DESIGN REVIEW

UNIT NO.
DATE: 07/28/2021
SCALE: As indicated
DRAWN BY: EG
CHECKED BY:

SHEET NO:
A2.3

WHATABURGER

Z:\Shared\PROJECTS\Whataburger\Mesa - SEC Power & Ray - 201214\11 CAD (SEG)\11.4 CD's\Revit\Model\PT20M BRIDGE SET - ARCH.rvt

MATERIAL TEXTURES

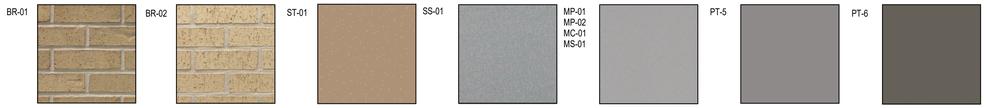

BRICK VENEER
ACME, PARK AVENUE
HERITAGE TEXTURE
BLEND: DTP114

BRICK VENEER
ACME, DOESKIN
HERITAGE TEXTURE
BLEND: DT114

STUCCO
MANUFACTURER: SHERWIN WILLIAMS
COLOR: SW 2830 CRAFTSMAN BROWN

STOREFRONT SYSTEM
BERRIDGE
COLOR: OLD CASTLE
STYLE: FG-3000
FINISH: ALUMINUM

METAL PANELS
BERRIDGE
COLOR: LEAD-COTE
STYLE: MATRIX MX 1.0
FINISH: ALUMINUM

PAINT
MANUFACTURER: SHERWIN WILLIAMS
COLOR: SW 6277 SPECIAL GRAY

PAINT
MANUFACTURER: SHERWIN WILLIAMS
COLOR: SW 7048 URBAN BRONZE

KEYNOTES

170	GUARDRAIL RE:B4/A0.1
203	MP-01; PRE-FINISHED CORRUGATED METAL PANEL
204	MP-01; PRE-FINISHED CORRUGATED METAL PANEL
205	BR-01; BRICK VENEER PARK AVENUE
206	BR-02; BRICK VENEER DOESKIN
207	ST-01; STUCCO SW 2835 CRAFTSMAN BROWN
208	MC-01; PRE-FINISHED METAL COPING
209	SS-01; ALUMINUM STOREFRONT SYSTEM
212	DRIVE-THRU DOOR CANOPY, PAINT PT-5
213	SERVICE DOOR CANOPY, PAINT PT-5

KEYNOTES

214	SUN SHADE CANOPY, SEE A6.9
215	ILLUMINATED SIGNAGE BY OTHERS, G.C. TO PROVIDE PLYWOOD BLOCKING AS NEEDED TO ATTACH SIGNAGE
218	DOWNSPOUT FROM ROOF DRAIN, LAMBS TONGUE DISCHARGE AT 12" ABOVE FINISH GRADE
219	OVERFLOW SCUPPER
221	DRIVE-THRU WINDOW
225	STAINLESS STEEL GREASE SHIELD W/ 2 1/2" HOLE THROUGH WALL FOR GREASE TANK
229	ROOF SCREEN WALL, RE: STRUCTURAL
231	MASONRY EXPANSION JOINT
232	FIRE DEPARTMENT CONNECTION, RE: FIRE PROTECTION
238	GENERAL CONTRACTOR SHALL PROVIDE A KNOX BOX PER JURISDICTIONAL REQUIREMENTS, LOCATION TO BE VERIFIED PRIOR TO CONSTRUCTION.
240	DASHED LINE INDICATES TOP OF DECK.

NOTES

1. EXTERIOR SIGNAGE TO BE PERMITED UNDER A SEPARATE SIGN PERMIT SET.

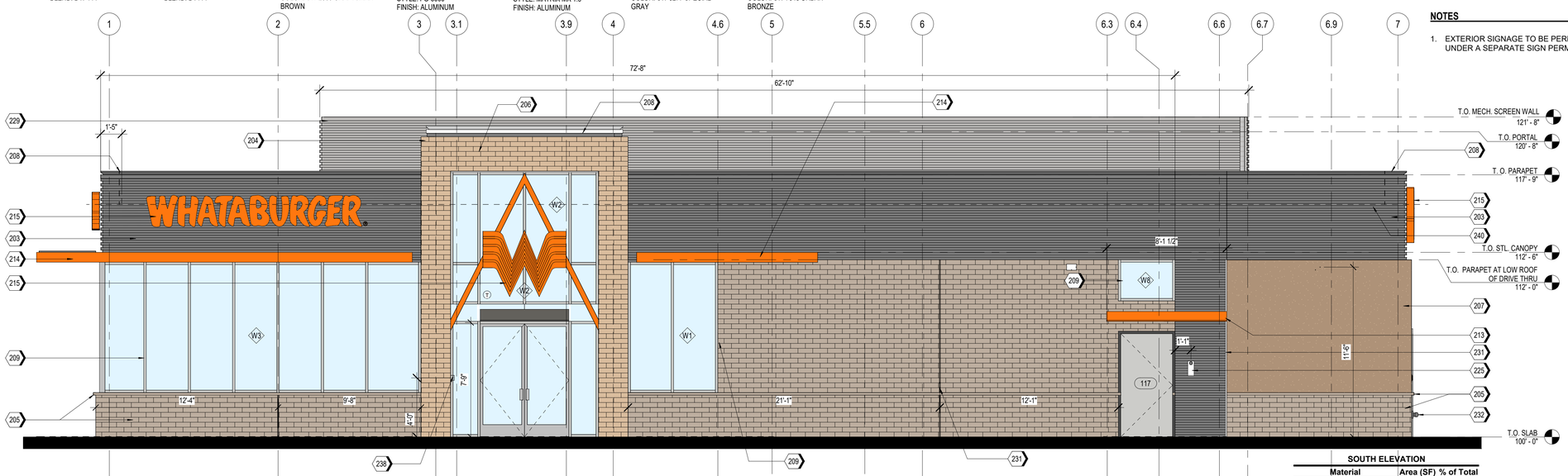

1 SOUTH ELEVATION
1/4" = 1'-0"

SOUTH ELEVATION

Material	Area (SF)	% of Total
Brick (Doeskin)	104.64	6.68%
Brick (Park Avenue)	454.32	29.00%
Stucco (Craftsman Brown)	112.37	7.17%
Metal Panel	458.86	29.29%
Storefront	436.56	27.86%
	1566.75	100%

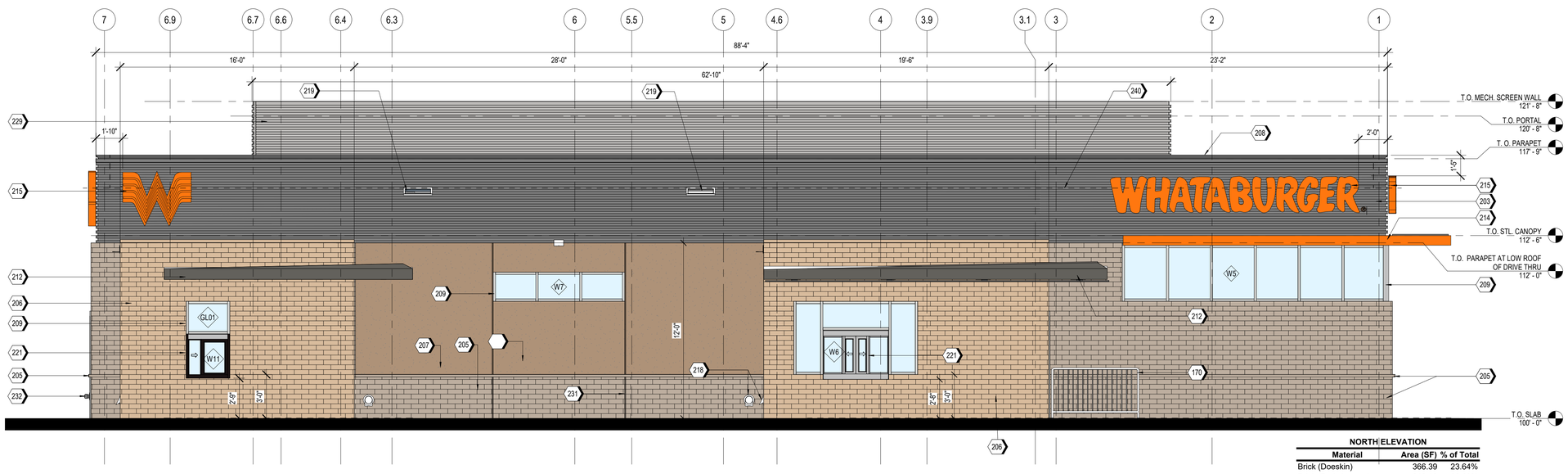

2 NORTH ELEVATION
1/4" = 1'-0"

NORTH ELEVATION

Material	Area (SF)	% of Total
Brick (Doeskin)	366.39	23.64%
Brick (Park Avenue)	319.18	20.60%
Stucco (Craftsman Brown)	230.77	14.89%
Metal Panel	485.72	31.35%
Storefront	147.49	9.52%
	1549.55	100%

ALTERNATIVE MATERIALS FOR REFERENCE

GL-01 VISION GLASS
BASIS OF DESIGN: VIRACON VUE1-30
SHADING COEFFICIENT (SC): .20
EXTERIOR REFLECTION: 19%
SOLAR HEAT GAIN COEFFICIENT (SHGC): .18
U-FACTOR: .26

GL-03 OPAQUE GLASS
BASIS OF DESIGN: VIRACON V948

SS-01 STOREFRONT SYSTEM
BASIS OF DESIGN: OLDCASTLE
STYLE: FG-3000
FINISH: ALUMINUM

MP-01 METAL PANEL
MANUFACTURER: BERRIDGE
STYLE: MATRIX MX 1.0
ALUMINUM 0.05"
COLOR: LEAD-COTE

BR-01 BRICK
MANUFACTURER: ACME
STYLE: UTILITY
HERITAGE TEXTURE
BLEND DT114
SIZE: 4" x 4" x 12"
COLOR: PARK AVENUE
LIGHT GREY GROUT JOINT

BR-02 BRICK
MANUFACTURER: ACME
STYLE: UTILITY
HERITAGE TEXTURE
BLEND DT114
SIZE: 4" x 4" x 12"
COLOR: DOESKIN
LIGHT GREY GROUT JOINT

ST-01 STUCCO
MANUFACTURER: SHERWIN WILLIAMS
COLOR: SW 2835 CRAFTSMAN BROWN

MO-01 MORTAR
MANUFACTURER: AHI
COLOR: VANILLA -N

MC-01 METAL COPING
MANUFACTURER: BERRIDGE
STYLE: SHADOWLINE COPING
COLOR: LEAD-COTE TO MATCH MP-01

PT-5 PAINT
BASIS OF DESIGN:
MANUFACTURER: SHERWIN WILLIAMS
STYLE: SW 6277 SPECIAL GRAY
SHEEN: FLAT

MS-01 METAL SOFFIT
MANUFACTURER: BERRIDGE
STYLE: HS-8
FINISH: PAINT PT-5

SYM.	DATE	DESCRIPTION	BY

PROJECT: 201214
WHATABURGER PT20M
SEC POWER & RAY
5427 S. POWER RD.
CITY OF MESA, AZ.

SEG
8280 E. GELDING DR #101,
SCOTTSDALE, AZ 85280
WWW.AZSEG.COM
TEL. 480.588.7228

WHATABURGER
300 CONCORD PLAZA DR,
SAN ANTONIO, TEXAS.
210-476-6000 ZIP 78216.

THIS DRAWING IS THE PROPERTY OF WHATABURGUER, SAN ANTONIO, TEXAS AND MAY NOT BE USED OR REPRODUCED IN WHOLE OR IN PART WITHOUT THE EXPRESSED WRITTEN CONSENT OF WHATABURGUER

SHEET TITLE:
EXTERIOR ELEVATIONS - COLORED
ISSUED FOR:
SITE PLAN / DESIGN REVIEW

UNIT NO.
DATE: 07/28/2021
SCALE: As indicated
DRAWN BY: EG
CHECKED BY:

SHEET NO:
A2.4

WHATABURGER

Z:\Shared\PROJECTS\Whataburger\Mesa - SEC Power & Ray - 201214\11 CAD (SEG)\11.4 CD's\Revit\Model\PT20M BRIDGE SET - ARCH.rvt

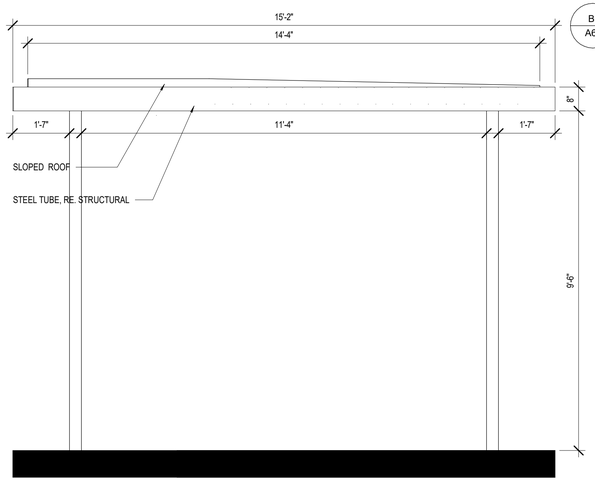

C2 DRIVE THRU CANOPY - SIDE ELEVATION.
SCALE 1/2" = 1'-0"

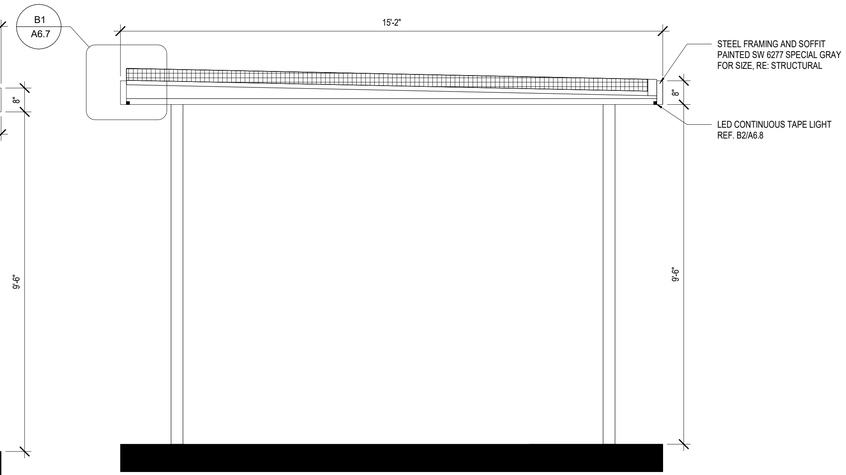

C1 DRIVE THRU CANOPY-SECTION 1.
SCALE 1/2" = 1'-0"

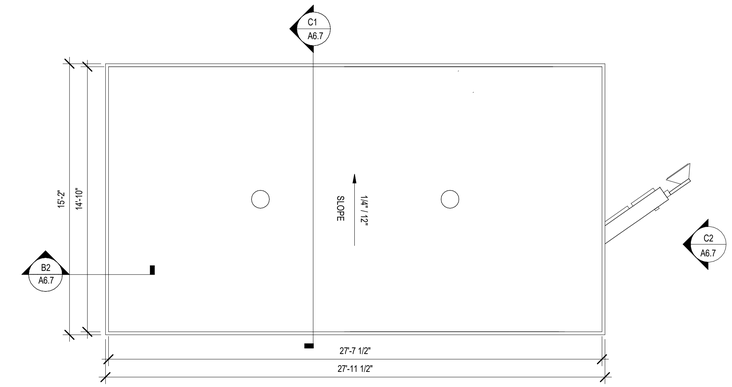

A1 LARGE DRIVE THRU CANOPY - ENLARGED ROOF PLAN
SCALE 1/4" = 1'-0"

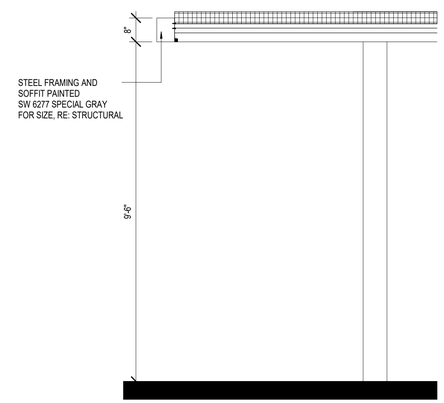

B2 DRIVE THRU CANOPY SECTION.
SCALE 1/2" = 1'-0"

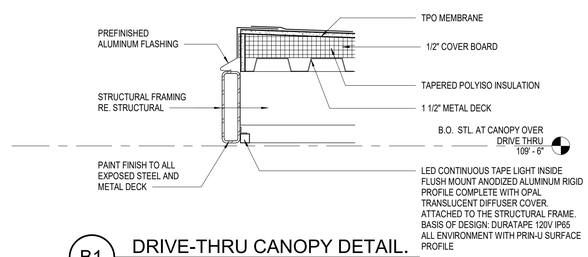

B1 DRIVE-THRU CANOPY DETAIL.
SCALE 1 1/2" = 1'-0"

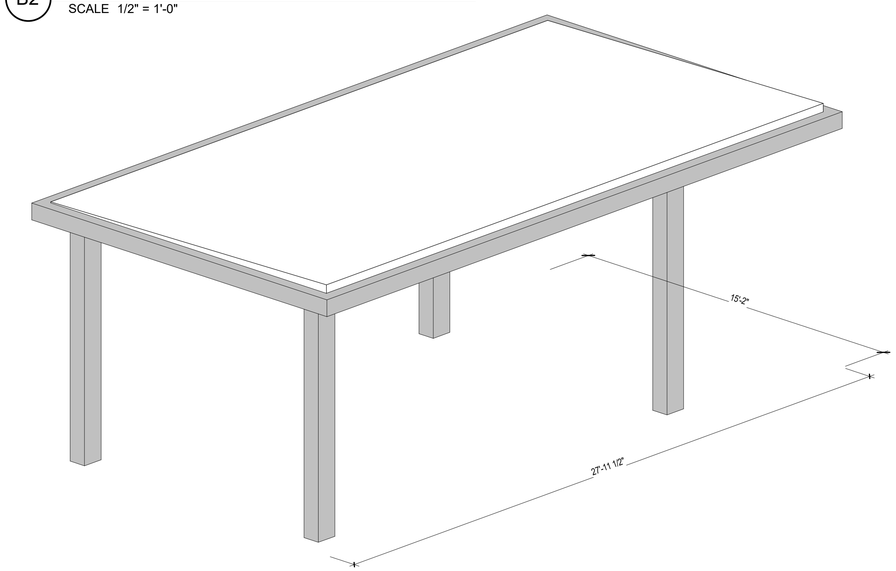

A2 LARGE DRIVE THRU CANOPY - ISOMETRIC
SCALE

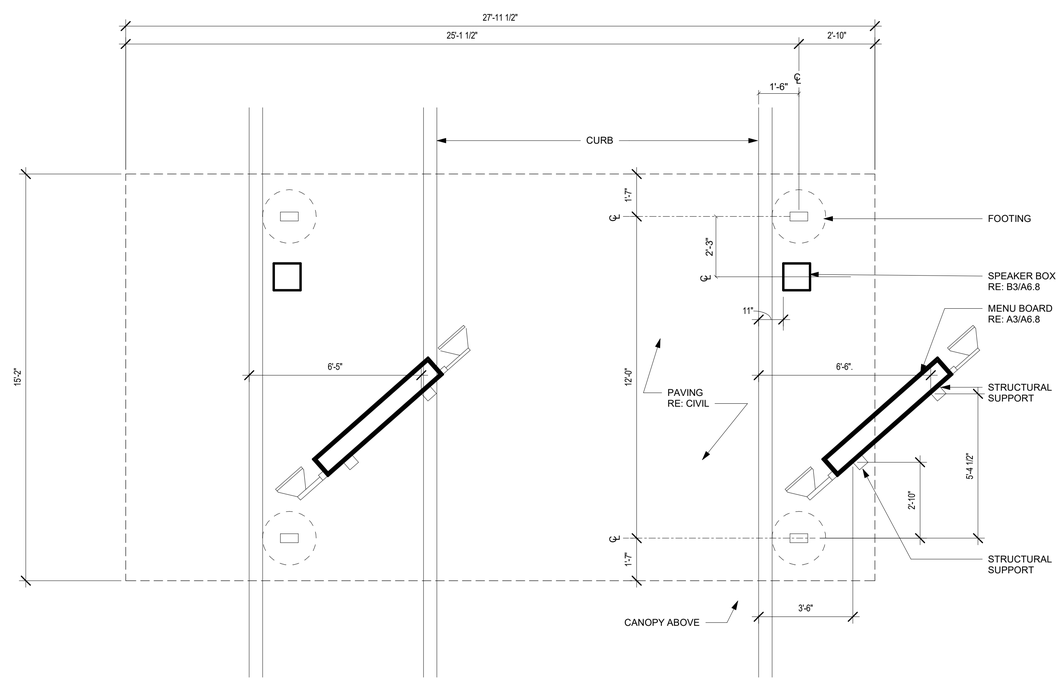

1 DRIVE-THRU - PLAN 2.
SCALE 3/8" = 1'-0"

SYM.	DATE	DESCRIPTION	BY

PROJECT: 201214
WHATABURGER PT20M
SEC POWER & RAY
5427 S. POWER RD.
CITY OF MESA, AZ.

SEG
8280 E. GELDING DR #101,
SCOTTSDALE, AZ 85280
WWW.AZSEG.COM
TEL. 480.588.7228

WHATABURGER
300 CONCORD PLAZA DR.
SAN ANTONIO, TEXAS.
210-476-6000 ZIP 78216.

THIS DRAWING IS THE PROPERTY OF WHATABURGUER, SAN ANTONIO, TEXAS AND MAY NOT BE USED OR REPRODUCED IN WHOLE OR IN PART WITHOUT THE EXPRESSED WRITTEN CONSENT OF WHATABURGUER

SHEET TITLE:
DRIVE-THRU CANOPY

ISSUED FOR:

UNIT NO.
DATE: 07/28/2021
SCALE: As indicated
DRAWN BY: EG
CHECKED BY:

SHEET NO:
A6.7.

WHATABURGER

Z:\Shared\PROJECTS\Whataburger\Mesa - SEC Power & Ray - 201214\11 CAD (SEG)\11.4 CD's\Revit\Model\PT20M BRIDGE SET - ARCH.rvt

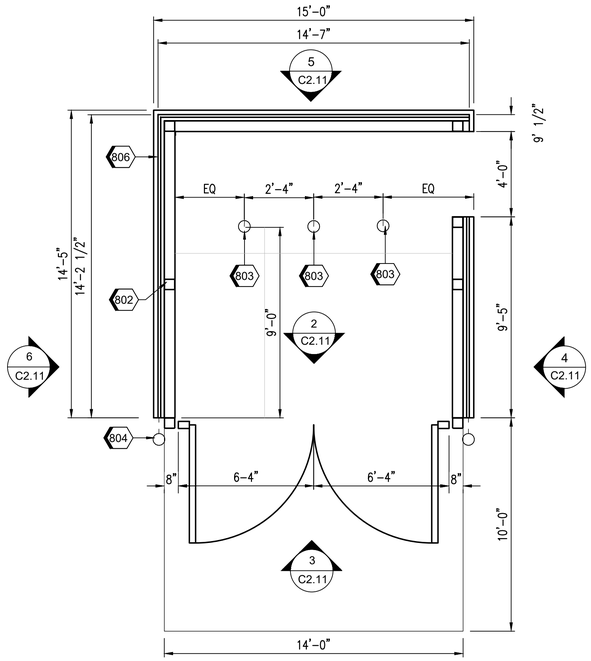

SYMBOL OF ACCESSIBILITY 1

KEYNOTES

801	PRE-FINISHED CORRUGATED METAL PANEL (MP-01)
802	STRUCTURAL STEEL, RE: STRUCTURAL
803	PIPE BOLLARDS: PAINTED: COLOR TO MATCH SHEILD COLOR, RE: D3/S5.1 BIN ENCLOSURES SHALL HAVE (3) 6" DIAMETER STEEL SAFETY POSTS INSTALLED IN THE BACK OF THE ENCLOSURE ONLY PER COM DETAIL M-62.04.1 PER CITY OF MESA STANDARD DETAILS FOR SOLID WASTE ENCLOSURES
804	PIPE BOLLARDS: IDEAL SHEILD: URBAN BRONZE, PANTONE 2336 XGC, RE D3/S5.1
805	FINISHED PAVEMENT, RE: CIVIL
806	CONCRETE CURB, RE: STRUCTURAL

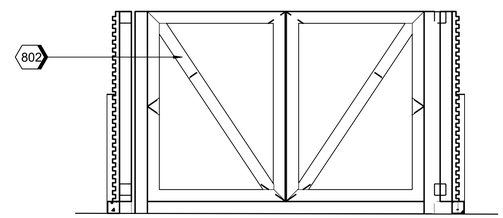

GATE INSIDE FACE 2

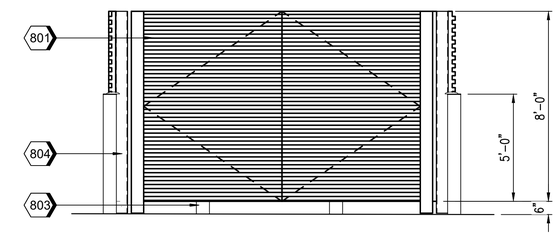

ELEVATION @ GATE 3

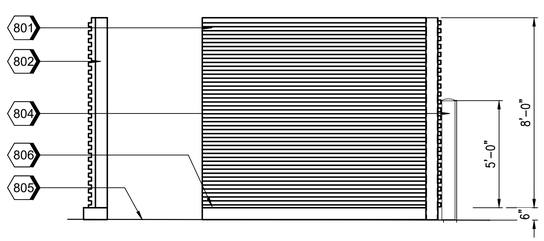

ELEVATION @ SIDE ENTRY 4

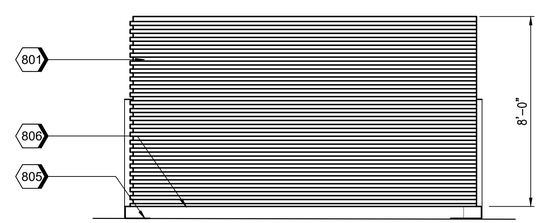

ELEVATION @ REAR 5

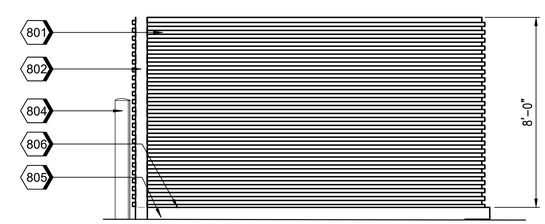

ELEVATION @ EAST 6

PRELIMINARY
NOT FOR
CONSTRUCTION

SUSTAINABILITY ENGINEERING GROUP
SEG
8280 E. GELDING DRIVE SUITE 101, SCOTTSDALE, ARIZONA 85260
WWW. AZSEG.COM TEL. 480.588.7226 FAX. 480.259.3534

WHATABURGER

Contact Arizona 811 at least two full working days before you begin excavation
ARIZONA811
Call 811 or alert.azbluestake.com

PROJECT
WHATABURGER

LOCATION
5427 S. POWER ROAD,
MESA, AZ

DRAWN	AF	07/08/2021
DESIGNED	JC, LR	07/08/2021
QC	SC	07/02/2021
FINAL QC	KZ	07/08/2021
PROJ. MGR.	AF	07/08/2021

DATE:
7/14/2021

ISSUED FOR:
SITE PLAN/DESIGN
REVIEW

REVISION NO.:	DATE:
1	
2	
3	
4	

JOB NO.:
201214

SHEET TITLE:
SITE PLAN DETAILS

PAGE NO.:

SHEET NO.:
C2.11

THIS DRAWING IS AN INSTRUMENT OF SERVICE AND THE PROPERTY OF SUSTAINABILITY ENGINEERING GROUP, AND SHALL REMAIN THEIR PROPERTY. THE USE OF THIS DRAWING SHALL BE RESTRICTED TO THE ORIGINAL SITE FOR WHICH IT IS PREPARED AND PUBLICATION THEREOF IS EXPRESSLY LIMITED TO SUCH USE.

LOCATION: Z:\SHARED\PROJECTS\WHATABURGER\MESA - SEC POWER & RAY - 201214\11 CAD (SEG)\11.3 ENTITLEMENT-PLANNING\201214-C2.00.DWG SAVED BY: KEVIN.ZENK DATE: 7/14/2021

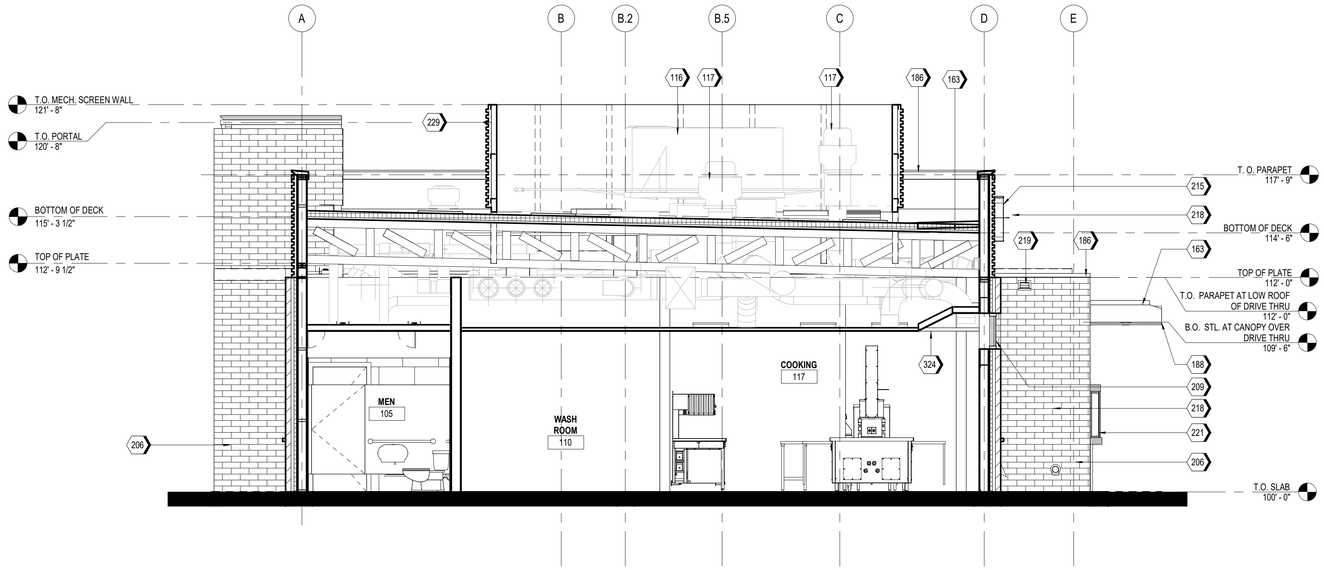

A2 TRANSVERSE SECTION 2

SCALE 1/4" = 1'-0"

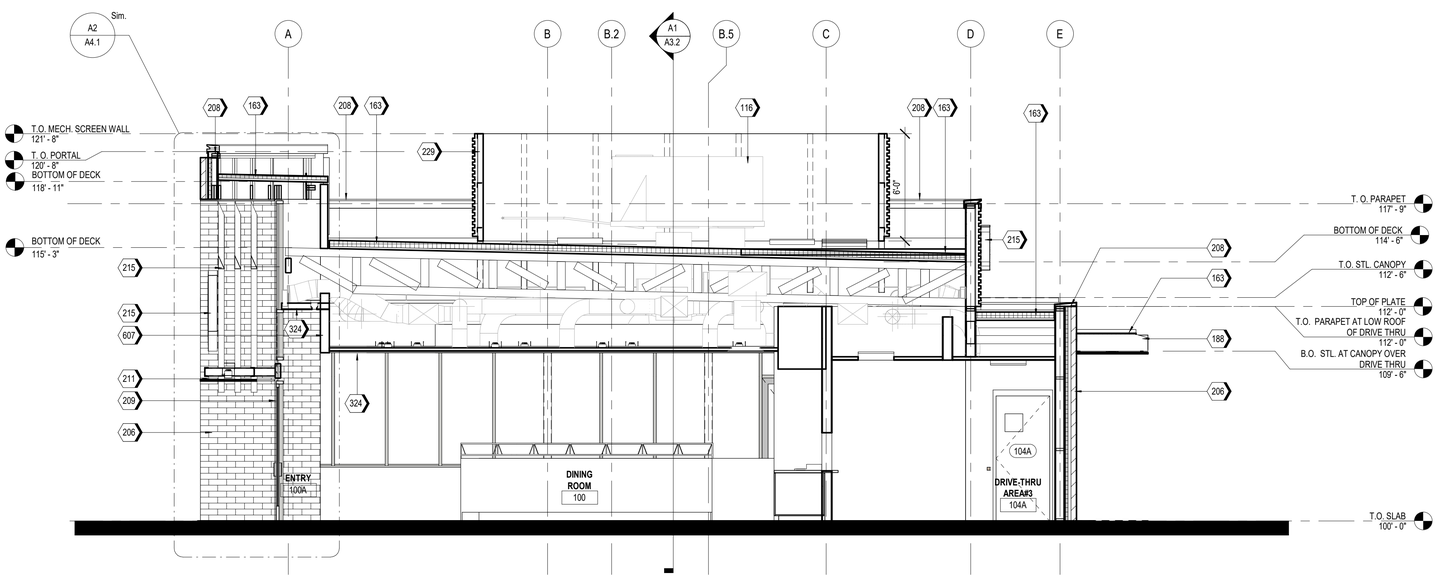

A1 TRANSVERSE SECTION

1/4" = 1'-0"

KEYNOTES

116	RTU, RE: MECHANICAL
117	EXHAUST FAN, RE: MECHANICAL
163	TPO MEMBRANE ROOFING SYSTEM; RE: A1/A5.3
186	PRE-FINISHED METAL COPING
188	PRE-FINISHED METAL TRIM
206	BR-02; BRICK VENEER DOESKIN
208	MC-01; PRE-FINISHED METAL COPING
209	SS-01; ALUMINUM STOREFRONT SYSTEM
211	ENTRY PORTAL CANOPY, PAINT PT-5
215	ILLUMINATED SIGNAGE BY OTHERS, G.C. TO PROVIDE PLYWOOD BLOCKING AS NEEDED TO ATTACH SIGNAGE
218	DOWNSPOUT FROM ROOF DRAIN, LAMBS TONGUE DISCHARGE AT 12" ABOVE FINISH GRADE
219	OVERFLOW SCUPPER
221	DRIVE-THRU WINDOW
229	MP-03; ROOF SCREEN WALL, RE: STRUCTURAL
324	CEILING AS SCHEDULED, RE: A1.3
607	VERTICAL FACE OF BULKHEAD TO BE PAINTED PT-4.

SYM.	DATE	DESCRIPTION	BY

PROJECT: 201214

WHATABURGER PT20M

SEC POWER & RAY

5427 S. POWER RD.
CITY OF MESA, AZ.

SEG

8280 E. GELDING DR #101,
SCOTTSDALE, AZ 85280
WWW.AZSEG.COM
TEL. 480.588.7228

WHATABURGER

300 CONCORD PLAZA DR.
SAN ANTONIO, TEXAS.
210-476-6000 ZIP 78216.

THIS DRAWING IS THE PROPERTY OF WHATABURGUER, SAN ANTONIO, TEXAS AND MAY NOT BE USED OR REPRODUCED IN WHOLE OR IN PART WITHOUT THE EXPRESSED WRITTEN CONSENT OF WHATABURGUER

SHEET TITLE:
BUILDING SECTIONS

ISSUED FOR:
3RD SITE PLAN /
DESIGN REVIEW

UNIT NO.

DATE: 07/08/2021

SCALE: 1/4" = 1'-0"

DRAWN BY: EG

CHECKED BY:

SHEET NO:

A3.1

WHATABURGER

Z:\Shared\PROJECTS\Whataburger\Mesa - SEC Power & Ray - 201214\11 CAD (SEG)\11.4 CD's\Revit\Model\PT20M BRIDGE SET - ARCH.rvt

KEYNOTES

116	RTU, RE: MECHANICAL
163	TPO MEMBRANE ROOFING SYSTEM; RE: A1/A5.3
203	MP-01; PRE-FINISHED CORRUGATED METAL PANEL
205	BR-01; BRICK VENEER PARK AVENUE
208	MC-01; PRE-FINISHED METAL COPING
209	SS-01; ALUMINUM STOREFRONT SYSTEM
213	SERVICE DOOR CANOPY, PAINT PT-5
215	ILLUMINATED SIGNAGE BY OTHERS, G.C. TO PROVIDE PLYWOOD BLOCKING AS NEEDED TO ATTACH SIGNAGE
229	MP-03; ROOF SCREEN WALL, RE: STRUCTURAL
241	
320	RIGID INSULATION
324	CEILING AS SCHEDULED, RE: A1.3
607	VERTICAL FACE OF BULKHEAD TO BE PAINTED PT-4.

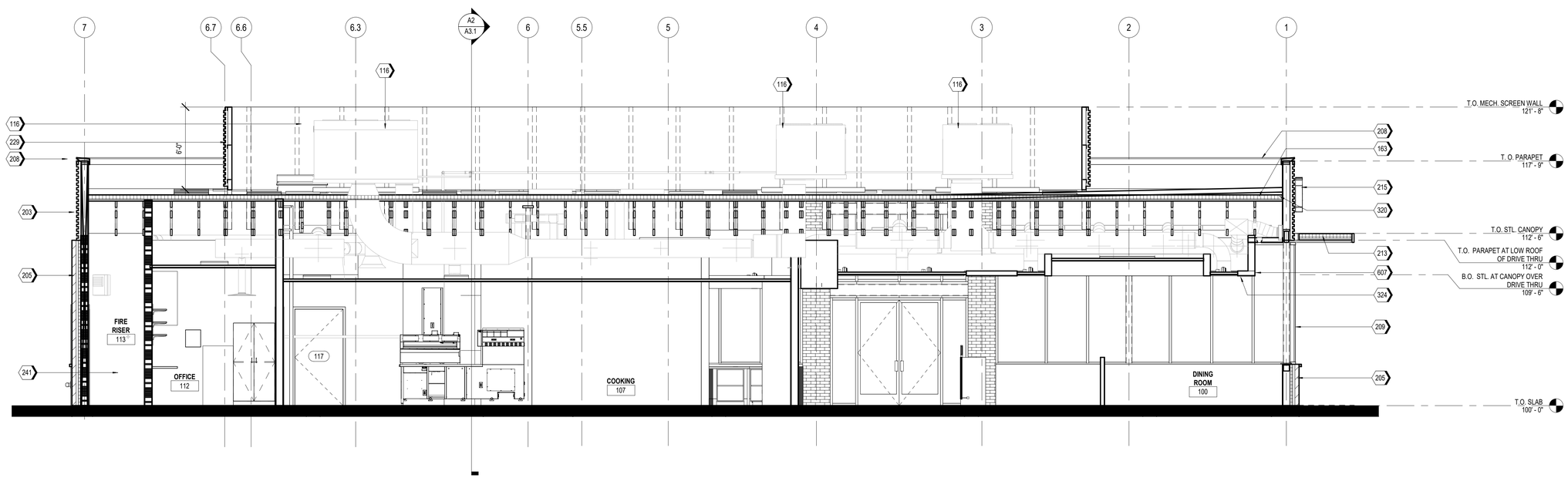

A1 LONGITUDINAL SECTION
SCALE 1/4" = 1'-0"

SYM.	DATE	DESCRIPTION	BY

PROJECT: 201214
WHATABURGER PT20M
SEC POWER & RAY
5427 S. POWER RD.
CITY OF MESA, AZ.

SEG
8280 E. GELDING DR #101,
SCOTTSDALE, AZ 85280
WWW.AZSEG.COM
TEL. 480.588.7228

WHATABURGER
300 CONCORD PLAZA DR.
SAN ANTONIO, TEXAS.
210-476-6000 ZIP 78216.

THIS DRAWING IS THE PROPERTY OF WHATABURGUER, SAN ANTONIO, TEXAS AND MAY NOT BE USED OR REPRODUCED IN WHOLE OR IN PART WITHOUT THE EXPRESSED WRITTEN CONSENT OF WHATABURGUER

SHEET TITLE:
BUILDING SECTIONS

ISSUED FOR:
3RD SITE PLAN / DESIGN REVIEW

UNIT NO.
DATE: 07/08/2021
SCALE: 1/4" = 1'-0"
DRAWN BY: EG
CHECKED BY:

SHEET NO:
A3.2

WHATABURGER

Z:\Shared\PROJECTS\Whataburger\Mesa - SEC Power & Ray - 201214\11 CAD (SEG)\11.4 CD's\Revit\Model\PT20M BRIDGE SET - ARCH.rvt

Whataburger Mesa
5427 S. Power Rd

Citizen Participation Plan

(Example Rendering)

Request:
Design and Site Plan Review for a proposed fast-food restaurant located at 5427 S. Power Rd., Mesa, AZ

Date: July 8, 2021

Purpose

The purpose of this Citizen Participation Plan is to inform citizens, property owners, neighbor associations, agencies, schools and businesses in the vicinity of the site of a site plan and design review application for the development of a new 2-lane Whataburger Drive-Through Restaurant located at 5427 S. Power Road. This plan will ensure that those affected by this application(s) will have an adequate opportunity to learn about and comment on the proposal.

Contact

Kevin Zenk – Project and Entitlements Coordinator
Sustainability Engineering Group, LLC
8280 E. Gelding Drive, Suite 101
Scottsdale, AZ 85260
Phone: 480-237-2511
Email: kevin@azseg.com

Pre-Application Meeting

A pre-application meeting with the City of Mesa planning staff was held on February 4, 2021. The purpose of the pre-application meeting was for staff to conduct a review of the preliminary site plan and provide design recommendations.

Action Plan

In order to provide effective citizen participation in conjunction with their applications, the following actions will be taken to provide opportunities to understand and address any real or perceived impacts their development that members of the community may have.

1. A contact list of property owners will be developed consisting of neighbors within 1,000' of the property. Per pre-submittal comments, there are no nearby HOAs/Neighborhood Associations.
2. For each application hearing required for citizens and agencies, notifications letters will be send out. Notification process will contain the following details:
   - All registered neighborhood associations, HOAs and property owners within 500 ft. of the development site as required per Sec. 11-67-5.
3. Any Property Owners/HOAs listed on the contact list will receive a "Notice of Public Hearing" letter describing the application's request, project details, a copy of the site plan and notification of the time/date of the hearings.
4. Sign posting of applications details and PZ hearing and Design Review Board dates. Sign posting to be posted within 15 days prior to each hearing/meeting date.

Notification lists will be obtained from the Maricopa County Parcel Assessor website and will include address labels and a buffer map depicting the radius used.

Schedule

Pre-Submittal Application Submittal – January 25, 2021
Pre- Submittal Meeting – February 4, 2021
1st Design/Site Plan Application Submittal – May 14, 2021
2nd Design/Site Plan Application Submittal – June 11, 2021
3rd Design/Site Plan Application Submittal – July 9, 2021
Design Review Board – TBD
Planning and Zoning Commission – TBD

Whataburger Mesa
5427 S. Power Rd

Citizen Participation Report
(Case #: ZON21-00449/DRB-00447)

(Example Rendering)

Application Request:
Design and Site Plan Review for a proposed fast-food restaurant located at 5427 S. Power Rd., Mesa, AZ

Date: September 10, 2021

SEG

Overview

This report describes the results and implementation of the Citizen Participation Plan for the development of the 2-lane Whataburger Drive-Through Restaurant located at 5427 S. Power Road. This report provides evidence that citizens, neighbors, public agencies and interested persons have had adequate opportunity to learn about the proposed development and provide comment on proposed plans and address any concerns related to the applications.

Contact

Kevin Zenk – Project and Entitlements Coordinator
Sustainability Engineering Group, LLC
8280 E. Gelding Drive, Suite 101
Scottsdale, AZ 85260
Phone: 480-237-2511
Email: kevin@azseg.com

Notifications

- Notification Letters for Design Review Board and Planning & Zoning Commission Hearings were mailed to nearby property owner and HOA/NOAs on August 26, 2021. The list of recipients was obtained using the Maricopa County Parcel Map Assessor with a 500' radius buffer. A total of 19 recipients were listed of which three (3) notification letters were returned. Please see, ***Exhibit 1 – Copy of DRB/PZ Board Notification Letter***, to view a copy of the buffer map, notification list and a copy of the final letter.
- A notification sign was posted at the site on August 26, 2021, in accordance with the Mesa Sign Posting Guidelines. The notification sign displayed the project information, upcoming hearing date and times for the DRB Hearing and PZ Board Hearing as well as contact information should citizen have questions or comments. Please see ***Exhibit 2 – Sign Posting Document***, to view a photo of the sign posting as well as a copy of the sign posting affidavit.

Correspondence and Telephone Calls

- The applicant (SEG) has not received any telephone calls from any nearby property owners or HOA/NOAs. It was noted by the City, at the time of the pre-application meeting, that there were no nearby HOA/NOAs.
- A draft copy of the Notification Letter and Sign Posting Template were emailed to the planner, Jennifer Gniffke, on August 25, 2021, to allow the City to review the notification materials for approval and blessing.
- Follow up email to the Planner, Jennifer Gniffke, on September 7, 2021, to inquire if there was any citizen feedback (emails, letters, telephone calls, etc.). Per the City Planner, no citizen feedback has been received.

Miscellaneous Documents

- A list of nearby property owners within 1,000 ft. of the site was kept on file and is attached with this report.

Neighborhood Meeting

As there are no nearby residential subdivisions and no nearby HOAs/NOAs, no Neighborhood Meeting was held.

Schedule
Pre-Submittal Application Submittal – January 25, 2021
Pre- Submittal Meeting – February 4, 2021
1st Design/Site Plan Application Submittal – May 14, 2021
2nd Design/Site Plan Application Submittal – June 11, 2021
3rd Design/Site Plan Application Submittal – July 9, 2021
DRB/PZ Board Notification Letters Mailed – August 26, 2021
DRB/PZ Board Sign Posting – August 26, 2021
Physical Material & Color Board Delivery – September 7, 2021
Design Review Board – September 14, 2021
Planning and Zoning Commission – September 22, 2021

Exhibits
Exhibit 1 – Copy of DRB/PZ Board Notification Letter
Exhibit 2 – 500' Notification Buffer Map and List
Exhibit 3 – Sign Posting Documentation
Exhibit 4 – Copy of Returned Notification Letters
Exhibit 5 – List of Property Owners within 1,000 ft.

SEG

Exhibit 1

Copy of DRB/PZ Board Notification Letter

NOTIFICATION OF HEARINGS

Dear Neighbor,

We have applied for Design and Site Plan Review for the property located at 5427 S. Power Road, Mesa, AZ This request is for development of a new 2-lane drive-thru restaurant. The case number(s) assigned to this project are DRB21-00447 (Design Review) and ZON21-00449 (Site Plan Review).

This letter is being sent to all property owners within 500 feet of the property at the request of the City of Mesa Planning Division. Enclosed for your review is a copy of the site plan and elevations of the proposed development. If you have any questions regarding this proposal, please call me at 480-237-2511 or e-mail me at kevin@azseg.com.

The Design Review application will be scheduled for consideration by the Mesa Design Review Board and will be held on Tuesday, September 14, 2021, in the Lower Level of the City Council Chambers. The meeting will begin at 4:30 p.m.

The Site Plan application will be scheduled for consideration by the Mesa Planning & Zoning Board and will be held on Wednesday, September 22, 2021, in the Lower Level of the City Council Chambers. The meeting will begin at 4:00 p.m.

The address for the City Council Chambers is:
57 E. 1st St.,
Mesa, AZ 852201

The meetings may also be watched on local cable **Mesa Channel 11**, online at **Mesa11.com/live or https://mesa11.zoom.us/j/5301232921** or listened to by **calling 888-788-0099 or 877-853-5247 (toll free) using meeting ID 530 123 2921 and following the prompts**.

If you want to provide a written comment or speak telephonically at the meeting, please submit an **online comment card** at https://www.mesaaz.gov/government/advisory-boards-committees/board-of-adjustment/online-meeting-comment-card at **least 1 hour prior to the start of the meeting.** If you want to speak at the meeting, you will need to indicate on the comment card that you would like to speak during the meeting, and you will need to call **888-788-0099 or 877-853-5247 (toll free) using meeting ID 530 123 2921 and following the prompts, prior to the start of the meeting.** When the item you have indicated that you want to speak on is before the Board, your line will be taken off mute and you will be given an opportunity to speak.

For help with the online comment card, or for any other technical difficulties, please call 480-644-2099.

The City of Mesa has assigned this case to Jennifer Gniffke of their Planning Division staff. She can be reached at 480-644-6439 or jennifer.gniffke@mesaAZ.gov should you have any questions regarding the public hearing process. If you have sold this property in the interim, please forward this correspondence to the new owner.

Sincerely,

Kevin Zenk
Project and Entitlements Coordinator
Sustainability Engineering Group, LLC
8280 E. Gelding Dr., Suite 101
Scottsdale, AZ 85260

WHATABURGER

PRELIMINARY SITE PLAN

5427 S. POWER ROAD, MESA AZ 85212

DEVELOPER
WHATABRANDS REAL ESTATE
300 CONCORD PLAZA DRIVE
SAN ANTONIO, TEXAS 78216
PHONE: 210-476-6181
ATTN: CLINT SAAVADRA

CIVIL ENGINEER
SUSTAINABILITY ENGINEERING GROUP
8280 E. GELDING DR., SUITE 101
SCOTTSDALE, ARIZONA 85260
PHONE: 480-588-7226
ATTN: ALI FAKIH

OWNER
GS TRUST/5427 S POWER LLC
5427 S. SETON DR, GILBERT,
AZ 85259
PHONE: 505-980-1991

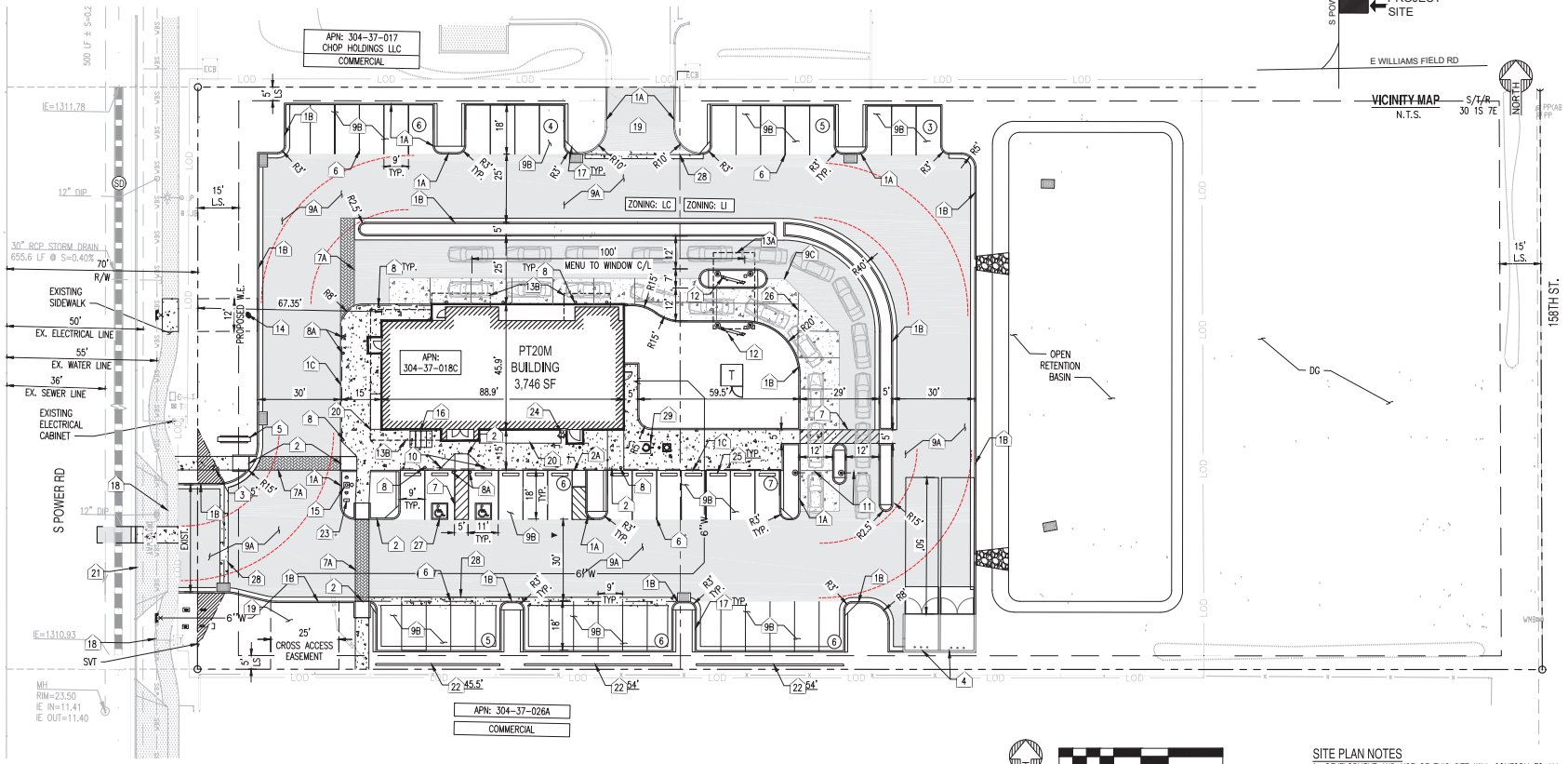

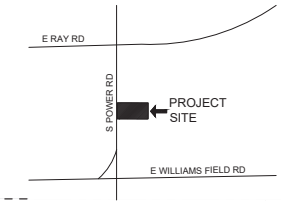

SITE PLAN KEYNOTES:

1A 6" VERTICAL CURB PER GRADING PLANS.
1B 6" CURB AND GUTTER.
1C TURN DOWN SLAB.
2 ACCESSIBLE RAMP PER GRADING PLANS.
2A LOADING ZONE RAMP PER GRADING PLANS.
3 CONCRETE SIDEWALK PER MAG STD. DET. 230, WIDTH PER PLAN.
4 TRASH ENCLOSURE PER DETAILS ON SHEET C2.11.
5 MONUMENT SIGN PER DET 8/C2.10..
6 4" WIDE WHITE PAINTED STRIPING, TYP.
7 5' WIDE PEDESTRIAN PATHWAY WITH 4" WIDE YELLOW PAINT, AT 45° 2 FEET O.C.
7A 5' STAMPED CONCRETE FOR PEDESTRIAN CROSSING.
8 6" STEEL BOLLARDS (TYP. 8). PER WB STD. DET. 5/C2.10.
8A 6" LIT STEEL BOLLARDS (TYP. 4). PER WB STD. DET. D3/S5.1.
9A HEAVY DUTY ASPHALT PAVEMENT.
9B LIGHT DUTY ASPHALT PAVEMENT.
9C CONCRETE PAVEMENT PER GRADING PLANS.
10 ACCESSIBLE PARKING SIGN PER DET. 2/C2.10 (TYP. 2).
11 DRIVE-THRU CLEARANCE BAR PER DET. 7/C2.10 (TYP. 2).
12 DRIVE-THRU MENU BOARD PER DET. 6/C2.10 (TYP. 2).
13A MENU BOARD CANOPY ABOVE PER ARCHITECTURAL PLANS.
13B 4' RESTAURANT CANOPY PER ARCHITECTURAL PLANS.
14 PROPOSED FIRE HYDRANT.
15 28' HIGH FLAG POLE
16 BIKE RACK PER DET. 9/C2.10 (4 SPACES).
17 GRANITE STRIPS AND ISLANDS NOSE, TYPICAL AT ISLANDS.
18 EXISTING 6' PUBLIC SIDEWALK.
19 25' CROSS ACCESS EASEMENT TO BE PROVIDED BETWEEN COMMERCIAL PARCELS.
20 PLANTER PER LANDSCAPE PLANS.
21 EXISTING DRIVEWAY ENTRANCE.
22 3' SCREEN WALL PER DET. 3/C2.10 LENGTH PER PLAN.
23 FREE STANDING MAILBOX BY G.C.
24 PROPOSED FDC LOCATION.
25 WHEEL STOP PER DET. 4/C2.10 (TYP. 13).
26 CONTROL JOINT PER GRADING PLANS, DET. 13/C3.11 & DET. 14/C3.11.
27 SYMBOL OF ACCESSIBILITY PER DET. 1/C2.10
28 VALLEY GUTTER PER GRADING PLANS.
29 GREASE INTERCEPTOR PER UTILITY PLAN.

PROPOSED LEGEND:

PROPERTY LINE
VERTICAL CURB
CURB & GUTTER
SITE WALL
PARKING COUNT
PAVEMENT STRIPING
HEAVY DUTY PAVEMENT
CONCRETE PAVEMENT/SIDEWALK
STEEL BOLLARD
LIGHTED STEEL BOLLARD
TRANSFORMER
35'/55' FIRE ACCESS TURN RADIUS

NORTH
0' 20' 40' 60'
SCALE: 1" = 20'

DEVELOPMENT SUMMARY TABLE:						
PROJECT ADDRESS: 5427 S. Power Rd. MESA, AZ 85212						
SEC OF S. POWER RD & E. RAY RD.						
PROJECT DESCRIPTION:						
PROPOSED WHATABURGER W/ DRIVE THRU						
DEVELOPMENT INFORMATION:						
APN:			304-37-018C			
ZONING:			LI & LC			
LOT SIZE:			105,003	SF	2.41	AC
PROPOSED USE:			RESTAURANT W/ DRIVE THROUGH			
CONSTRUCTION TYPE:			VB			
BUILDING AREA:			3,751	SF		
BUILDING HEIGHT:		LC MAX.	30	FT.		
		LI MAX.	40	FT.		
		PROPOSED	21	FT.		
PARKING REQUIREMENT						
	BUILDING AREA	PREP	2,131	SF		
		DINING	1,620	SF		
	BUILDING AREA TOTAL		3,751	SF		
REQUIRED PARKING			38		100	PER SF
MAXIMUM PARKING			48			
PROPOSED PARKING			48	TOTAL		
REQUIRED ADA			2			
PROPOSED ADA			2	INCL.		
REQUIRED BIKE PARKING			4			
PROPOSED BIKE PARKING			4			

SITE PLAN NOTES

1. DEVELOPMENT AND USE OF THIS SITE WILL CONFORM TO ALL APPLICABLE CODES AND ORDINANCES.
2. FIRE LANES SHALL BE ESTABLISHED AND PROPERLY DESIGNATED IN ACCORDANCE WITH THE LOCAL MUNICIPALITY AND LOCAL FIRE DEPARTMENT REQUIREMENTS.
3. ALL NEW OR RELOCATED UTILITIES WILL BE PLACED UNDERGROUND.
4. ALL ROOFTOP EQUIPMENT AND SATELLITE DISHES SHALL BE SCREENED TO THE HEIGHT OF THE TALLEST EQUIPMENT.
5. ALL SERVICE AREAS SHALL BE SCREENED TO CONCEAL TRASH CONTAINERS, LOADING DOCKS, TRANSFORMERS, BACKFLOW PREVENTERS AND OTHER MECHANICAL OR ELECTRICAL EQUIPMENT FROM EYE LEVEL ADJACENT TO ALL PUBLIC STREETS.
6. IF APPLICABLE, PEDESTRIAN ACCESS ROUTES ARE PROVIDED IN COMPLIANCE WITH THE LATEST ADA STANDARDS. ALL RAMPS MUST MEET ADA ACCESSIBILITY GUIDELINES (ADAAG) STANDARDS, 2% MAX CROSS SLOPES, AND 5% MAXIMUM LONGITUDINAL SLOPES. TRUNCATED DOMES, AS DETECTABLE WARNINGS, ARE REQUIRED, AS SHOWN IN PLANS, ON ALL SITE RAMPS AND WALKS THAT CROSS A VEHICULAR WAY PER ADAAG CHAPTER 7.
7. PIPE BOLLARDS SHALL BE INSTALLED IN TRAFFIC AND LOADING AREAS AS REQUIRED TO PROTECT BUILDING CORNERS, RECEIVING AREAS, HYDRANTS, TRANSFORMERS, METERS, GENERATORS, COMPACTORS, STEPS, AND RAILINGS, AS NECESSARY.
8. ALL SIGNAGE REQUIRES SEPARATE APPROVAL AND PERMITS.
9. A MINIMUM 6-FOOT HORIZONTAL SEPARATION BETWEEN WATER AND SEWER PIPELINES WILL BE MAINTAINED.
10. OWNERS OF PROPERTY ADJACENT TO THE PUBLIC RIGHT-OF-WAY WILL HAVE THE RESPONSIBILITY FOR MAINTAINING ALL LANDSCAPING WITHIN THE RIGHT-OF-WAY IN ACCORDANCE WITH APPROVED PLANS.

PRELIMINARY
NOT FOR
CONSTRUCTION

SUSTAINABILITY ENGINEERING GROUP
8280 E. GELDING DRIVE SUITE 101, SCOTTSDALE, ARIZONA 85260
WWW.AZSEG.COM TEL. 480.588.7226 FAX 480.299.3934

WHATABURGER

Contact Arizona 811 at least two full working days before you begin excavation
Call 811 or click Arizona811.com

PROJECT: WHATABURGER
LOCATION: 5427 S. POWER ROAD, MESA, AZ

DRAWN	AF	07/08/2021
DESIGNED	JC, LR	07/08/2021
QC	SC	07/02/2021
FINAL QC	KZ	07/08/2021
PROJ. MGR.	AF	07/08/2021

DATE: 7/14/2021
ISSUED FOR: SITE PLAN/DESIGN REVIEW

REVISION NO.:	DATE:
1	
2	
3	
4	

JOB NO.: 201214
SHEET TITLE: PRELIMINARY SITE PLAN
PAGE NO.:
SHEET NO.: C2.00

THIS DRAWING IS AN INSTRUMENT OF SERVICE AND THE PROPERTY OF SUSTAINABILITY ENGINEERING GROUP, AND SHALL REMAIN THEIR PROPERTY. THE USE OF THIS DRAWING SHALL BE RESTRICTED TO THE ORIGINAL SITE FOR WHICH IT IS PREPARED AND PUBLICATION THEREOF IS EXPRESSLY LIMITED TO SUCH USE.

LOCATION: Z:\SHARED\PROJECTS\WHATABURGER\MESA - SEC POWER & RAY - 201214\11 CAD (SEG)\11.3 ENTITLEMENT-PLANNING\201214-C2.00.DWG SAVED BY: KEVIN.ZENK DATE: 7/14/2021

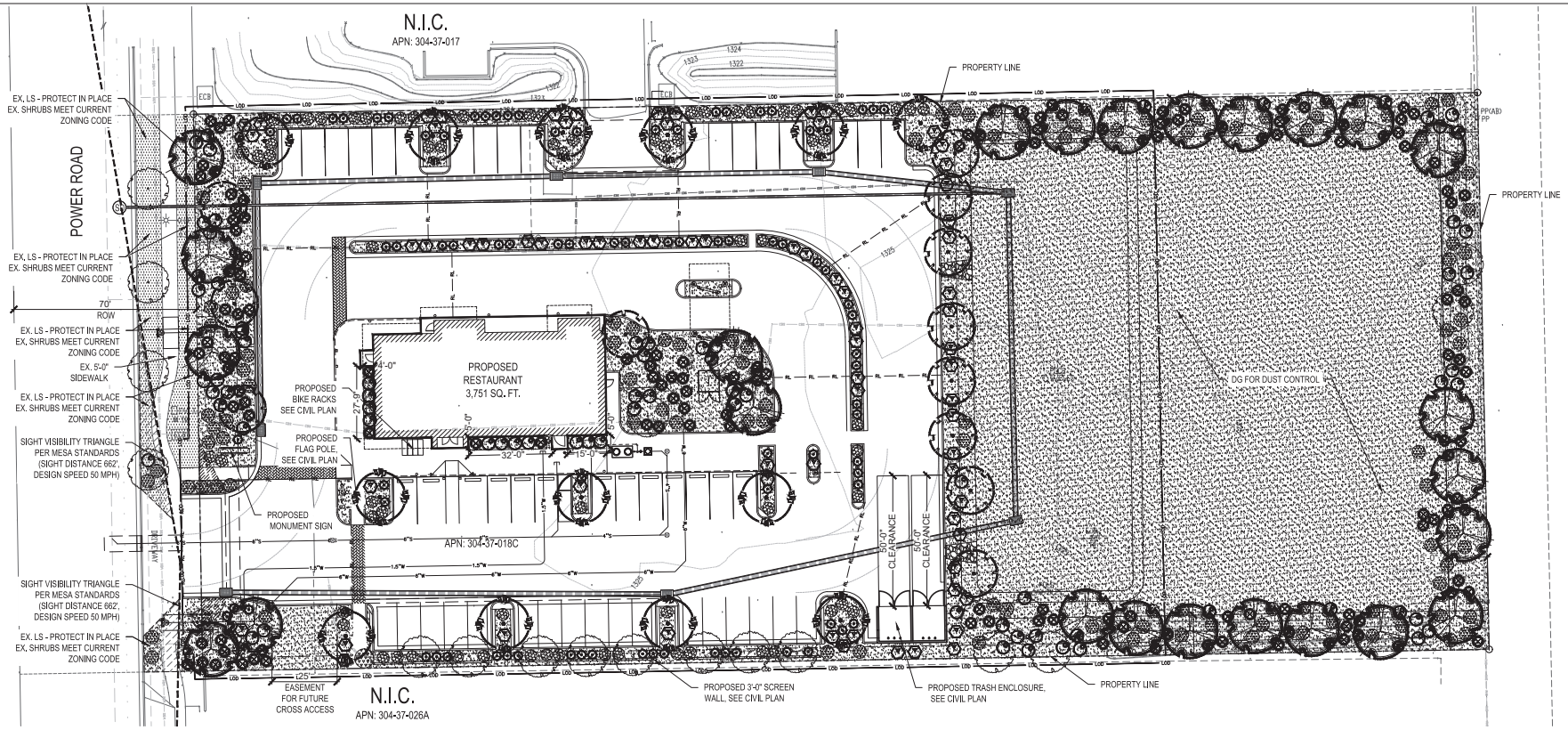

PLANTING MATERIAL LEGEND

TREES	SIZE	NOTES	QTY
Pistacia atlantica x integerrima 'Red Push" Pistache Caliper Size: 1.5"	24" Box H 9' W 3.5'	*ADWR	25
Acacia salicina Willow Leaf Acacia Caliper Size: 1.5"	24" Box H 8' W 3.5'	Multi *ADWR	13
Chilopsis linearis Desert Willow Caliper Size: 2.0"	36" Box H 9' W 6'	*ADWR	12
Vitex agnus-castus Chaste Tree Caliper Size: 1.5"	24" Box H 7' W 4'	*ADWR	21
GROUNDCOVERS			**QTY**
Lantana montevidensis Trailing Lantana 'Purple'	5 Gallon	*ADWR	114
Convolvulus mauritanicus Ground Morning Glory	5 Gallon	*ADWR	64
SHRUBS / ACCENTS			**QTY**
Ruellia californica Baja Ruellia	5 Gallon	*ADWR	72
Eremophila hygrophana Blue Bells	5 Gallon	*ADWR	142
Muhlenbergia rigens Deer Grass	5 Gallon	*ADWR	76
Hesperaloe parviflora Red Yucca	5 Gallon	*ADWR	85
LANDSCAPE MATERIALS			
Decomposed Granite. 3/4" minus, Express Gold 2" deep in planting areas per plan.			60,100 sq.ft.

*ADWR = Arizona Department of Water Resources Approved Low-Water Use Plant

LANDSCAPE SITE NOTES

1. UNAUTHORIZED CHANGES TO DRAWINGS - THE LANDSCAPE ARCHITECT SHALL NOT BE RESPONSIBLE FOR, OR LIABLE FOR, UNAUTHORIZED CHANGES TO OR USE OF DRAWINGS. CHANGES TO THE PLANS MUST BE IN WRITING AND MUST BE APPROVED BY LANDSCAPE ARCHITECT PRIOR TO COMMENCEMENT OF WORK.
2. OWNER SHALL OBTAIN AND PAY FOR ONLY CITY OF MESA ISSUED PERMITS TO COMPLETE WORK. CONTRACTOR SHALL PAY FOR ALL OTHER PERMITS.
3. NOTIFY LANDSCAPE ARCHITECT AT LEAST 4 WORKING DAYS IN ADVANCE PRIOR TO REQUIRED OR DESIRED INSPECTION AT (480) 250-0116.
4. STAKE SITE MATERIALS LOCATION AND RECEIVE LANDSCAPE ARCHITECT APPROVAL PRIOR TO INSTALLATION.

CITY OF MESA LANDSCAPE CALCULATIONS

	REQUIRED	PROVIDED
PERIMETER LANDSCAPE PER 11-33-3 MESA Z/O ARTERIAL STREET - U DESIGNATE 1 TREE 6 SHRUBS PER 25 FEET OF STREET FRONTAGE	7 TREES / 42 SHRUBS	POWER ROAD: 180' 10 TREES PROVIDED 98 SHRUBS PROVIDED
SHADE COVERAGE AREA	50% OF LS AREA	75% COVERAGE
INTERIOR PARKING LANDSCAPE PER 11-33-4 MESA Z/O: 1 TREE / 3 SHRUB PER PLANTER ISLAND	13 TREES / 39 SHRUBS	13 TREES / 70 SHRUB PROVIDED
FOUNDATION LANDSCAPE PER 11-33-5 MESA Z/O* 1 TREE / 50 LF BUILDING FACE	5 TREES	263 FT TOTAL EDGE = 5 TREES 5 TREES PROVIDED
15' WIDE PERIMETER LANDSCAPE BUFFER PER 11-33-3 MESA Z/O ARTERIAL 3 TREES AND 20 SHRUBS PER 100 FEET	NORTHERN BOUNDARY 15 TREES AND 99 SHRUBS SOUTHERN BOUNDARY 15 TREES AND 99 SHRUBS EASTERN BOUNDARY 7 TREES AND 43 SHRUBS	NORTHERN BOUNDARY 16 TREES AND 148 SHRUBS SOUTHERN BOUNDARY 25 TREES AND 117 SHRUBS EASTERN BOUNDARY 7 TREES AND 46 SHRUBS

ARIZONA BLUESTAKE CENTER
CALL TWO WORKING DAYS BEFORE YOU DIG
1.800.782.5348

HARRINGTON PLANNING + DESIGN
1921 S Alma School Rd, Suite 204
Mesa, Arizona 85210
Tel: 480-250-0116
www.HarringtonPlanningDesign.com

LANDSCAPE ARCHITECT
44161
JASON E. HARRINGTON
ARIZONA, U.S.A.
07.30.21

WHAT A BURGER RESTAURANT DEVELOPMENT

5427 S. POWER ROAD
Mesa, Arizona 85212

REV.	COMMENT	DATE

ISSUE	DATE
Permit Submittal	07.30.21
Preliminary Submittal	07.14.21

LANDSCAPE PACKAGE

July 30, 2021

DRAWN BY:	TW
CHECK BY:	JEH
PROJ. NO.:	2021-021
CASE NO.:	-

NORTH
0 10 20 40

CASE NO.: -

LANDSCAPE PLAN

L1.0

2 of 6

This drawing is an instrument of service and the property of Harrington Planning + Design and shall be restricted to the original site for which it was prepared and publication thereof is expressly limited to such use.
Reuse, reproduction by any method in part or in whole is prohibited without HP+D written consent.

MATERIAL TEXTURES

BR-01 — **BRICK VENEER**
ACME, PARK AVENUE
HERITAGE TEXTURE
BLEND: DTP114

BR-02 — **BRICK VENEER**
ACME, DOESKIN
HERITAGE TEXTURE
BLEND: DT114

ST-01 — **STUCCO**
MANUFACTURER: SHERWIN WILLIAMS
COLOR: SW 2830 CRAFTSMAN BROWN

SS-01 — **STOREFRONT SYSTEM**
BERRIDGE
COLOR: OLD CASTLE
STYLE: FG-3000
FINISH: ALUMINUM

MP-01, MP-02, MC-01, MS-01 — **METAL PANELS**
BERRIDGE
COLOR: LEAD-COTE
STYLE: MATRIX MX 1.0
FINISH: ALUMINUM

PT-5 — **PAINT**
MANUFACTURER: SHERWIN WILLIAMS
COLOR: SW 6277 SPECIAL GRAY

PT-6 — **PAINT**
MANUFACTURER: SHERWIN WILLIAMS
COLOR: SW 7048 URBAN BRONZE

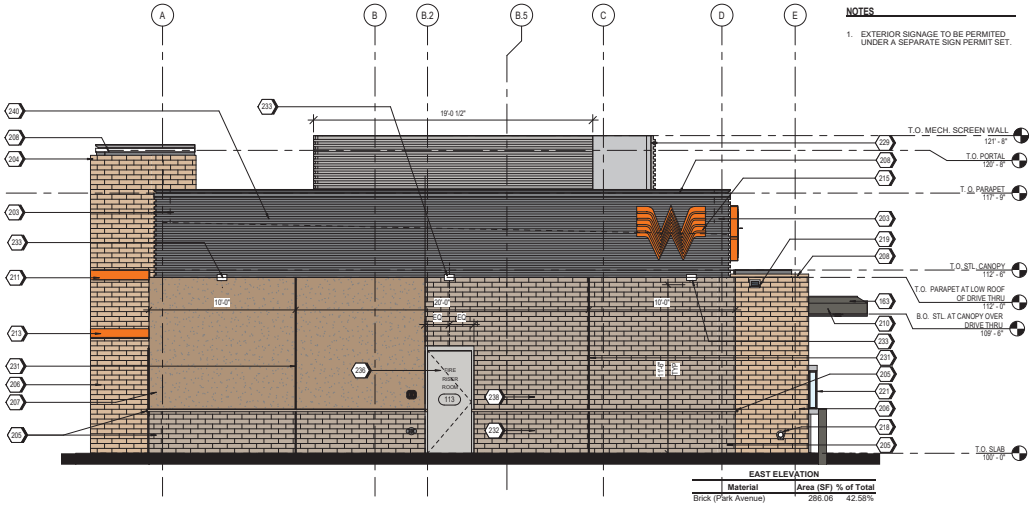

NOTES

1. EXTERIOR SIGNAGE TO BE PERMITTED UNDER A SEPARATE SIGN PERMIT SET.

EAST ELEVATION

Material	Area (SF)	% of Total
Brick (Park Avenue)	286.06	42.58%
Stucco (Craftsman Brown)	169.49	25.23%
Metal Panel	216.22	32.19%
	671.77	100%

1 EAST ELEVATION
1/4" = 1'-0"

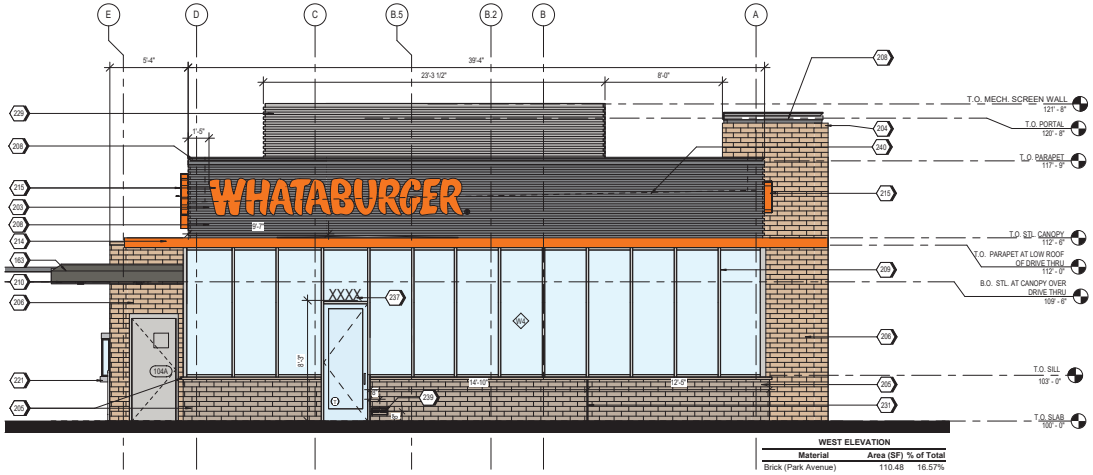

WEST ELEVATION

Material	Area (SF)	% of Total
Brick (Park Avenue)	110.48	16.57%
Metal Panel	196.13	29.41%
Storefront	360.16	54.02%
	666.77	100%

2 WEST ELEVATION
1/4" = 1'-0"

KEYNOTES

163	TPO MEMBRANE ROOFING SYSTEM. RE: A1/A5.3
203	MP-01; PRE-FINISHED CORRUGATED METAL PANEL
204	MP-01; PRE-FINISHED CORRUGATED METAL PANEL
205	BR-01; BRICK VENEER PARK AVENUE
206	BR-02; BRICK VENEER DOESKIN
207	ST-01; STUCCO SW 2830 CRAFTSMAN BROWN
208	MC-01; PRE-FINISHED METAL COPING
209	SS-01; ALUMINUM STOREFRONT SYSTEM
210	PRE-FINISHED DRIVE-THRU CANOPY
211	ENTRY PORTAL CANOPY, PAINT PT-5
213	SERVICE DOOR CANOPY, PAINT PT-5
214	SUN SHADE CANOPY, SEE A6.9
215	ILLUMINATED SIGNAGE BY OTHERS, G.C. TO PROVIDE PLYWOOD BLOCKING AS NEEDED TO ATTACH SIGNAGE
218	DOWNSPOUT FROM ROOF DRAIN, LAMBS TONGUE DISCHARGE AT 12" ABOVE FINISH GRADE
219	OVERFLOW SCUPPER
221	DRIVE-THRU WINDOW

KEYNOTES

229	ROOF SCREEN WALL. RE: STRUCTURAL
231	MASONRY EXPANSION JOINT
232	FIRE DEPARTMENT CONNECTION. RE: FIRE PROTECTION
233	EXTERIOR LIGHT FIXTURE. RE: ELECTRICAL
234	RTU. RE: MECHANICAL
236	RISER ROOM SIGN (PER 2015 IFC CHAPTER 5 - APPROVED SIGNS SHALL BE CONSTRUCTED OF DURABLE MATERIALS, PERMANENTLY INSTALL AND READILY VISIBLE. LETTERS SHALL BE A MINIMUM OF 2" WITH A MINIMUM 3/8" STROKE. THE COLORS OF THE LETTERS SHALL BE CONTRASTING WITH RESPECT TO BACKGROUND.
237	BUILDING ADDRESS 6"HIGH WHITE VINYL NUMBERS WITH 1" STROKE, 10' A.F.G.
238	GENERAL CONTRACTOR SHALL PROVIDE A KNOX BOX PER JURISDICTIONAL REQUIREMENTS, LOCATION TO BE VERIFIED PRIOR TO CONSTRUCTION.
239	EMERGENCY STEP LIGHT. RE: ELECTRICAL
240	DASHED LINE INDICATES TOP OF DECK.

ALTERNATIVE MATERIALS FOR REFERENCE

GL-01 — VISION GLASS
BASIS OF DESIGN: VIRACON VUE1-30
SHADING COEFFICENT (SC): .20
EXTERIOR REFLECTION: 19%
SOLAR HEAT GAIN COEFFICIENT (SHGC): .18
U-FACTOR: .26

GL-03 — OPAQUE GLASS
BASIS OF DESIGN: VIRACON V948

SS-01 — STOREFRONT SYSTEM
BASIS OF DESIGN: OLDCASTLE
STYLE: FG-3000
FINISH: ALUMINUM

MP-01 — METAL PANEL
MANUFACTURER: BERRIDGE
STYLE: MATRIX MX 1.0
ALUMINUM 0.05"
COLOR: LEAD-COTE

BR-01 — BRICK
MANUFACTURER: ACME
STYLE: UTILITY
HERITAGE TEXTURE
BLEND DT114
SIZE: 4" x 4" x 12"
COLOR: PARK AVENUE
LIGHT GREY GROUT JOINT

BR-02 — BRICK
MANUFACTURER: ACME
STYLE: UTILITY
HERITAGE TEXTURE
BLEND DT114
SIZE: 4" x 4" x 12"
COLOR: DOESKIN
LIGHT GREY GROUT JOINT

ST-01 — STUCCO
MANUFACTURER: SHERWIN WILLIAMS
COLOR: SW 2835 CRAFTSMAN BROWN

MO-01 — MORTAR
MANUFACTURER: AHI
COLOR: VANILLA -N

MC-01 — METAL COPING
MANUFACTURER: BERRIDGE
STYLE: SHADOWLINE COPING
COLOR: LEAD-COTE TO MATCH MF-01

PT-5 — PAINT
BASIS OF DESIGN:
MANUFACTURER: SHERWIN WILLIAMS
STYLE: SW 6277 SPECIAL GRAY
SHEEN: FLAT

MS-01 — METAL SOFFIT
MANUFACTURER: BERRIDGE
STYLE: HS-8
FINISH: PAINT PT-5

SYM	DATE	DESCRIPTION	BY

PROJECT: 201214
WHATABURGER PT20M
SEC POWER & RAY
5427 S. POWER RD.
CITY OF MESA, AZ.

SEG
8280 E. GELDING DR #101,
SCOTTSDALE, AZ 85260
WWW.AZSEG.COM
TEL. 480.588.7228

WHATABURGER
300 CONCORD PLAZA DR.
SAN ANTONIO, TEXAS.
210-476-6000 ZIP 78216.

THIS DRAWING IS THE PROPERTY OF WHATABURGER, SAN ANTONIO, TEXAS AND MAY NOT BE USED OR REPRODUCED IN WHOLE OR IN PART WITHOUT THE EXPRESSED WRITTEN CONSENT OF WHATABURGER

SHEET TITLE:
EXTERIOR ELEVATIONS - COLORED
ISSUED FOR:
SITE PLAN / DESIGN REVIEW

UNIT NO.
DATE: 07/28/2021
SCALE: As indicated
DRAWN BY: EG
CHECKED BY:

SHEET NO:
A2.3

WHATABURGER

Z:\Shared\PROJECTS\Whataburger\Mesa - SEC Power & Ray - 201214\11 CAD (SEG)\11.4 CD's\Rev\Model\PT20M BRIDGE SET - ARCH.rvt

MATERIAL TEXTURES

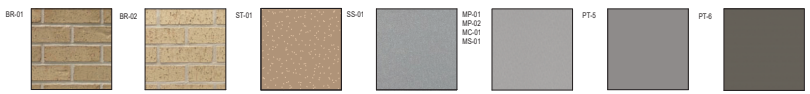

BRICK VENEER
ACME, PARK AVENUE
HERITAGE TEXTURE
BLEND: DTP114

BRICK VENEER
ACME, DOESKIN
HERITAGE TEXTURE
BLEND: DT114

STUCCO
MANUFACTURER: SHERWIN WILLIAMS
COLOR: SW 2830 CRAFTSMAN BROWN

STOREFRONT SYSTEM
BERRIDGE
COLOR: OLD CASTLE
STYLE: FG-3000
FINISH: ALUMINUM

METAL PANELS
BERRIDGE
COLOR: LEAD-COTE
STYLE: MATRIX MX 1.0
FINISH: ALUMINUM

PAINT
MANUFACTURER: SHERWIN WILLIAMS
COLOR: SW 6277 SPECIAL GRAY

PAINT
MANUFACTURER: SHERWIN WILLIAMS
COLOR: SW 7048 URBAN BRONZE

KEYNOTES

170	GUARDRAIL RE:B4/A0.1
203	MP-01; PRE-FINISHED CORRUGATED METAL PANEL
204	MP-01; PRE-FINISHED CORRUGATED METAL PANEL
205	BR-01; BRICK VENEER PARK AVENUE
206	BR-02; BRICK VENEER DOESKIN
207	ST-01; STUCCO SW 2835 CRAFTSMAN BROWN
208	MC-01; PRE-FINISHED METAL COPING
209	SS-01; ALUMINUM STOREFRONT SYSTEM
212	DRIVE-THRU DOOR CANOPY, PAINT PT-5
213	SERVICE DOOR CANOPY, PAINT PT-5

KEYNOTES

214	SUN SHADE CANOPY, SEE A6.9
215	ILLUMINATED SIGNAGE BY OTHERS, G.C. TO PROVIDE PLYWOOD BLOCKING AS NEEDED TO ATTACH SIGNAGE
218	DOWNSPOUT FROM ROOF DRAIN, LAMBS TONGUE DISCHARGE AT 12" ABOVE FINISH GRADE
219	OVERFLOW SCUPPER
221	DRIVE-THRU WINDOW
225	STAINLESS STEEL GREASE SHIELD W/ 2 1/2" HOLE THROUGH WALL FOR GREASE TANK
229	ROOF SCREEN WALL, RE: STRUCTURAL
231	MASONRY EXPANSION JOINT
232	FIRE DEPARTMENT CONNECTION, RE: FIRE PROTECTION
238	GENERAL CONTRACTOR SHALL PROVIDE A KNOX BOX PER JURISDICTIONAL REQUIREMENTS. LOCATION TO BE VERIFIED PRIOR TO CONSTRUCTION.
240	DASHED LINE INDICATES TOP OF DECK.

NOTES

1. EXTERIOR SIGNAGE TO BE PERMITED UNDER A SEPARATE SIGN PERMIT SET.

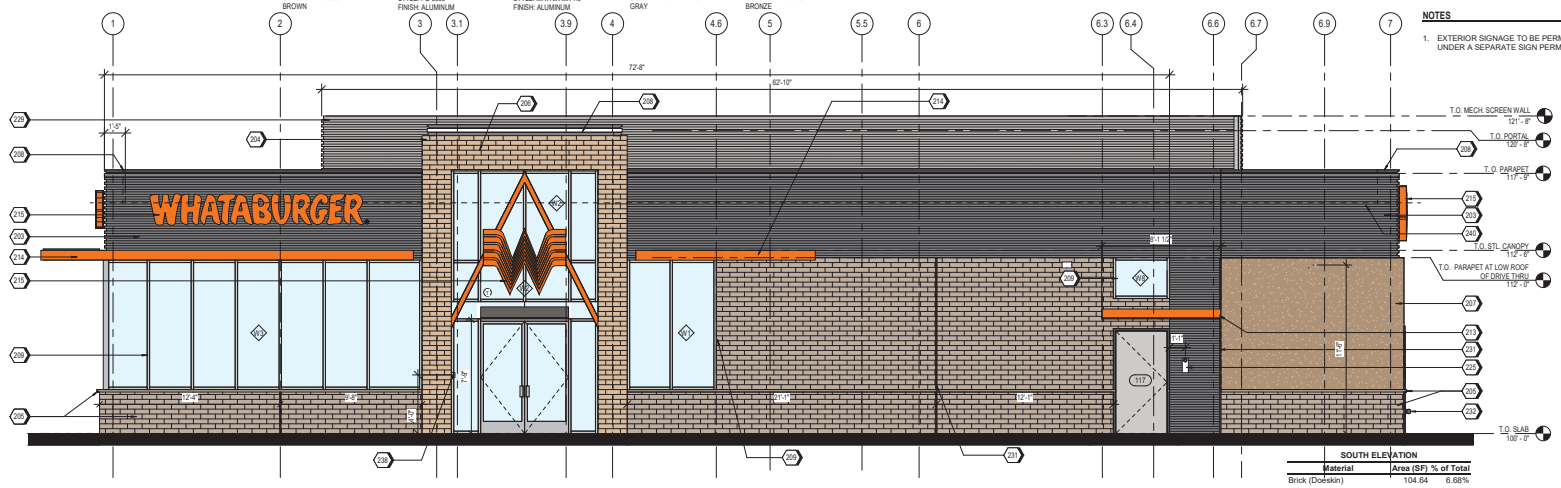

1 SOUTH ELEVATION
1/4" = 1'-0"

SOUTH ELEVATION

Material	Area (SF)	% of Total
Brick (Doeskin)	104.64	6.68%
Brick (Park Avenue)	454.32	29.00%
Stucco (Craftsman Brown)	112.37	7.17%
Metal Panel	458.86	29.29%
Storefront	436.56	27.86%
	1566.75	100%

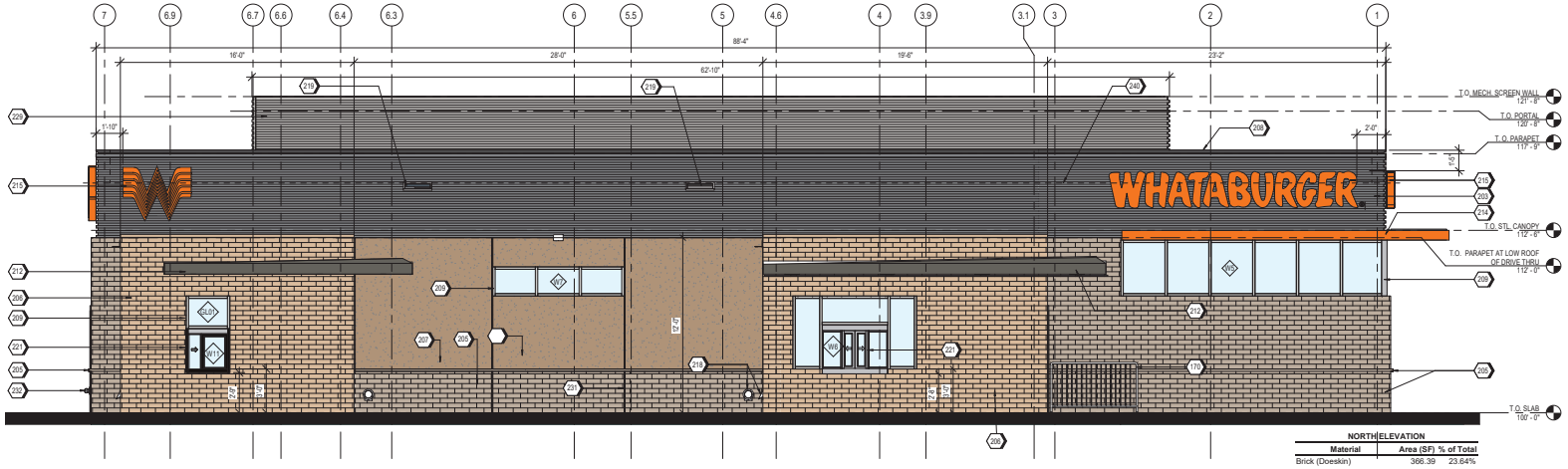

2 NORTH ELEVATION
1/4" = 1'-0"

NORTH ELEVATION

Material	Area (SF)	% of Total
Brick (Doeskin)	366.39	23.64%
Brick (Park Avenue)	319.18	20.60%
Stucco (Craftsman Brown)	230.77	14.89%
Metal Panel	485.72	31.35%
Storefront	147.49	9.52%
	1549.55	100%

ALTERNATIVE MATERIALS FOR REFERENCE

GL-01 VISION GLASS
BASIS OF DESIGN: VIRACON VUE1-30
SHADING COEFFICIENT (SC): .20
EXTERIOR REFLECTION: 19%
SOLAR HEAT GAIN COEFFICIENT (SHGC): .18
U-FACTOR: .26

GL-03 OPAQUE GLASS
BASIS OF DESIGN: VIRACON V948

SS-01 STOREFRONT SYSTEM
BASIS OF DESIGN: OLDCASTLE
STYLE: FG-3000
FINISH: ALUMINUM

MP-01 METAL PANEL
MANUFACTURER: BERRIDGE
STYLE: MATRIX MX 1.0
ALUMINUM 0.05"
COLOR: LEAD-COTE

BR-01 BRICK
MANUFACTURER: ACME
STYLE: UTILITY
HERITAGE TEXTURE
BLEND DT114
SIZE: 4" x 4" x 12"
COLOR: PARK AVENUE
LIGHT GREY GROUT JOINT

BR-02 BRICK
MANUFACTURER: ACME
STYLE: UTILITY
HERITAGE TEXTURE
BLEND DT114
SIZE: 4" x 4" x 12"
COLOR: DOESKIN
LIGHT GREY GROUT JOINT

ST-01 STUCCO
MANUFACTURER: SHERWIN WILLIAMS
COLOR: SW 2835 CRAFTSMAN BROWN

MO-01 MORTAR
MANUFACTURER: AHI
COLOR: VANILLA -N

MC-01 METAL COPING
MANUFACTURER: BERRIDGE
STYLE: SHADOWLINE COPING
COLOR: LEAD-COTE TO MATCH MF-01

PT-5 PAINT
BASIS OF DESIGN:
MANUFACTURER: SHERWIN WILLIAMS
STYLE: SW 6277 SPECIAL GRAY
SHEEN: FLAT

MS-01 METAL SOFFIT
MANUFACTURER: BERRIDGE
STYLE: HS-8
FINISH: PAINT PT-5

SYM	DATE	DESCRIPTION	BY

PROJECT: 201214
WHATABURGER PT20M
SEC POWER & RAY
5427 S. POWER RD.
CITY OF MESA, AZ.

SEG
8280 E. GELDING DR #101,
SCOTTSDALE, AZ 85260
WWW.AZSEG.COM
TEL. 480.588.7228

WHATABURGER
300 CONCORD PLAZA DR.
SAN ANTONIO, TEXAS.
210-476-6000 ZIP 78216.

THIS DRAWING IS THE PROPERTY OF WHATABURGER, SAN ANTONIO, TEXAS AND MAY NOT BE USED OR REPRODUCED IN WHOLE OR IN PART WITHOUT THE EXPRESSED WRITTEN CONSENT OF WHATABURGER

SHEET TITLE:
EXTERIOR ELEVATIONS - COLORED
ISSUED FOR:
SITE PLAN / DESIGN REVIEW

UNIT NO.
DATE: 07/28/2021
SCALE: As indicated
DRAWN BY: EG
CHECKED BY:

SHEET NO:
A2.4

WHATABURGER

Z:\Shared\PROJECTS\Whataburger\Mesa - SEC Power & Ray - 201214\11 4 CD's\Rev\Model\PT20M BRIDGE SET - ARCH.rvt

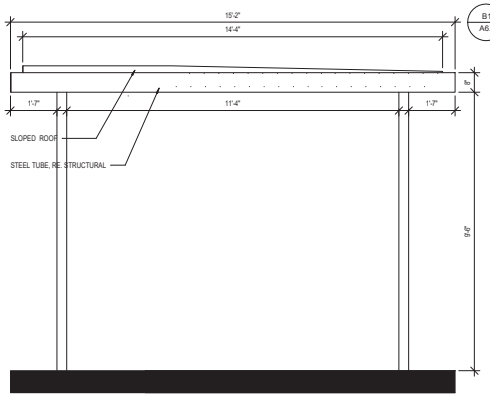

C2 DRIVE THRU CANOPY - SIDE ELEVATION.
SCALE 1/2" = 1'-0"

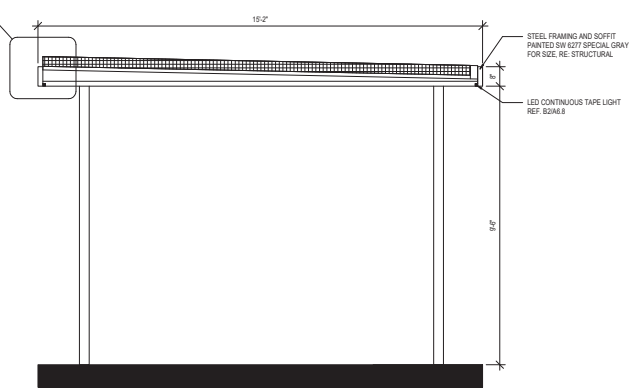

C1 DRIVE THRU CANOPY-SECTION 1.
SCALE 1/2" = 1'-0"

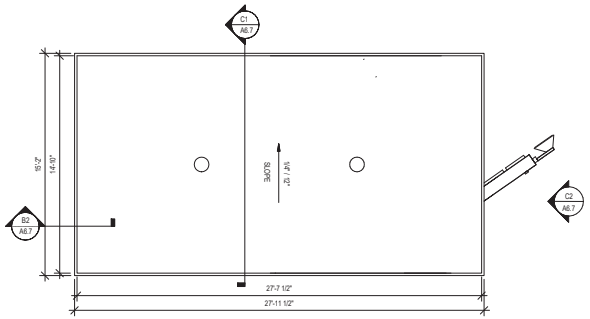

A1 LARGE DRIVE THRU CANOPY - ENLARGED ROOF PLAN
SCALE 1/4" = 1'-0"

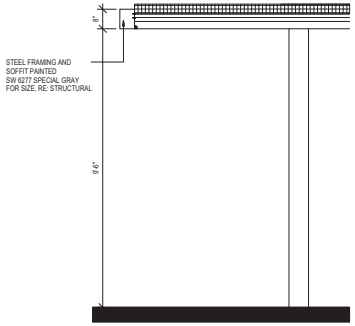

B2 DRIVE THRU CANOPY SECTION.
SCALE 1/2" = 1'-0"

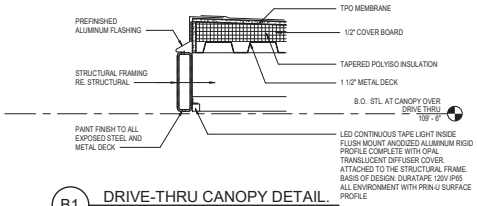

B1 DRIVE-THRU CANOPY DETAIL.
SCALE 1 1/2" = 1'-0"

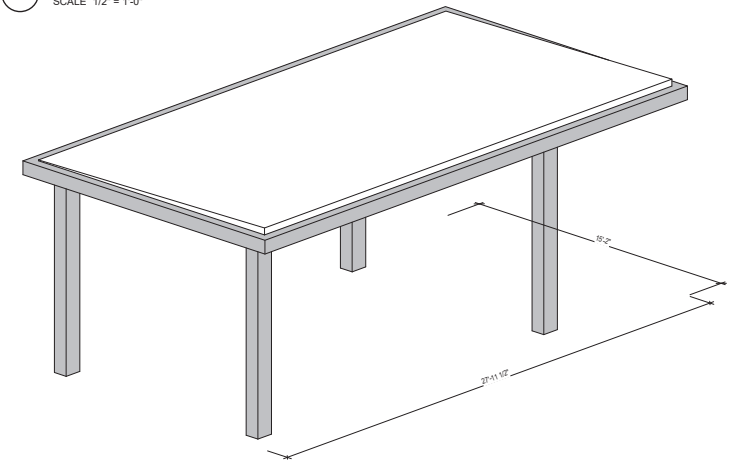

A2 LARGE DRIVE THRU CANOPY - ISOMETRIC
SCALE

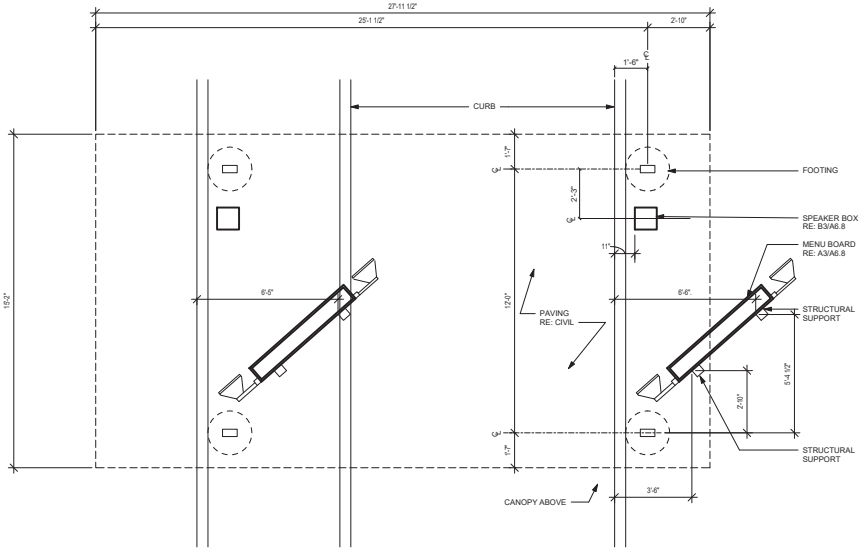

1 DRIVE-THRU - PLAN 2.
SCALE 3/8" = 1'-0"

SYM	DATE	DESCRIPTION	BY

PROJECT: 201214
WHATABURGER PT20M
SEC POWER & RAY
5427 S. POWER RD.
CITY OF MESA, AZ.

SEG
8280 E. GELDING DR #101,
SCOTTSDALE, AZ 85260
WWW.AZSEG.COM
TEL. 480.588.7228

WHATABURGER
300 CONCORD PLAZA DR.
SAN ANTONIO, TEXAS.
210-476-6000 ZIP 78216.

THIS DRAWING IS THE PROPERTY OF WHATABURGER, SAN ANTONIO, TEXAS AND MAY NOT BE USED OR REPRODUCED IN WHOLE OR IN PART WITHOUT THE EXPRESSED WRITTEN CONSENT OF WHATABURGER

SHEET TITLE:
DRIVE-THRU CANOPY

ISSUED FOR:

UNIT NO.
DATE: 07/28/2021
SCALE: As indicated
DRAWN BY: EG
CHECKED BY:

SHEET NO:
A6.7.

WHATABURGER

Z:\Shared\PROJECTS\Whataburger\Mesa - SEC Power & Ray - 201214\11 CAD (SEG)\11.4 CD's\Rev\Model\PT20M BRIDGE SET - ARCH.rvt

SEG

Exhibit 2

500’ Notification Buffer Map and List

Search By
Using the Mouse
What I Know
Buffer
Results
Step 1: Enter a search distance and apply buffer:
500
Feet
Apply Buffer
Clear Buffer
Step 2 (optional): Choose a parcel selection method:
A. Entirely within the Buffer
B. Within or touching the Buffer
S POWER RD

Parcel Number	Owner	MAIL_ADDR1	MAIL_CITY	MAIL_STATE	MAIL_ZIP
304-37-001C	UNITED STATES OF AMERICA	3707 N 7TH ST	PHOENIX	AZ	85017
304-37-015B	CACTUS GROVE PROPERTIES LLC	1701 S MILL AVE	TEMPE	AZ	85281
304-37-015C	RM2 LLC	3747 E SOUTHERN AVE	PHOENIX	AZ	85040
304-37-015D	APACHE SUN PROPERTIES LLC	1421 S CRESTON CIR	MESA	AZ	85204
304-37-016	1973 AC PROPERTIES LLC	2043 S CONSTELLATION CT	GILBERT	AZ	85295
304-37-017A	5409 S POWER ROAD LLC	415 N DEARBORN 4TH FLOOR	CHICAGO	IL	60654
304-37-018C	GS TRUST/5427 S POWER LLC	5427 S SETON	GILBERT	AZ	85295
304-37-023N	CITY OF MESA	20 E MAIN ST	MESA	AZ	85201
304-37-023P	HORNE REAL ESTATE INVESTMENTS LLC	9 N BULLMOOSE CIR	CHANDLER	AZ	85224
304-37-023R	AVALON POWER LLC	10611 N HAYDEN RD SUITE D-103	SCOTTSDALE	AZ	85260
304-37-026A	CHO FREDERICK Y TR	9530 W PROSPECTOR DR	QUEEN CREEK	AZ	85142
304-37-033	HZ PROPS RE LTD	4415 STATE HWY 6	SUGAR LAND	TX	77478
304-37-034	723 21ST PLACE INVESTMENTS LLC	230 BONNIE LN	SANTA BARBARA	CA	93108
304-37-035	MESA HOTEL PARTNERS LLC	2520 E UNIVERSITY DR STE 103	TEMPE	AZ	85281
304-39-915, ET AL	BC PICO LLC/DRIVE PICO LLC/AUTOMATI	11601 SANTA MONICA BLVD	LOS ANGELES	CA	90025
304-39-964	ALAMO GILBERT HOLDINGS LLC	1870 W BITTERS RD NO 103	SAN ANTONIO	TX	78248
304-39-965, ET AL	POWER ROAD RETAIL PROPERTIES LLC	4915 E BASELINE RD SUITE 105	GILBERT	AZ	85234
304-39-967	GATEWAY HOTEL PARTNERS LLC	4915 E BASELINE RD NO 105	GILBERT	AZ	85234
304-39-979	LANDMARK LAND INVESTMENTS LLC	4915 E BASELINE RD NO 105	GILBERT	AZ	85234

= Notification Letter Returned to Sender

SEG

Exhibit 3

Sign Posting Documentation

CITY OF MESA
PUBLIC NOTICE
ZONING HEARING
PLANNING & ZONING BOARD
57 EAST FIRST STREET
MESA, ARIZONA
DRB HEARING TIME: 4:30 PM DATE: 9/14/2021
PZ HEARING TIME: 4:00 PM DATE: 9/22/2021
CASE: ZON21-00449/DRB21-00447
REQUEST: Design and Site Plan Review to develop a new 2-lane drive-through restaurant at the address of 5427 S. Power Rd., Mesa.
APPLICANT: Kevin Zenk (Entitlements Coordinator)
PHONE: 480-237-2511
Planning Division 480-644-6439
Posting date: 8/26/2021
8/26/21 05:56:00

City of Mesa Planning Division

AFFIDAVIT OF PUBLIC POSTING

To be submitted to the Planning Division by _____, 2021

Date: August 26th, 2021

I, Maria Hitt, being the owner or authorized agent for the zoning case below, do hereby affirm that I have posted the property related to ZON21-00449/ DRB21-00447(case number), on the 26th day of AUGUST, 2021. The posting was in one place with one notice for each quarter mile of frontage along perimeter right-of-way so that the notices were visible from the nearest public right-of-way.

SUBMIT PHOTOGRAPHS OF THE POSTINGS MOUNTED ON AN 8.5" BY 11" SHEET OF PAPER WITH THIS AFFIDAVIT.

Applicant's/Representative's signature: Maria Hitt

SUBSCRIBED AND SWORN before me this 26th day of August, 2021

Marybeth Conrad
Notary Public

MARYBETH CONRAD
Notary Public - Arizona
Maricopa County
Commission # 591461
My Comm. Expires Oct 25, 2024

SEG

Exhibit 4

Copy of Returned Letters

SEG
8280 E Gelding Rd, Suite 101
Scottsdale, AZ 85260

PHOENIX AZ 852
26 AUG 2021 PM 4 L

UNITED STATES OF AMERICA
3707 N 7TH ST
PHOENIX, AZ 85017

NIXIE 850 FE 1
RETURN TO SENDER
NOT DELIVERABLE AS ADDR
UNABLE TO FORWARD
BC: 85260362126 *1814-

85014-505998TF
85260>3621

SEG
8280 E Gelding Rd, Suite 101
Scottsdale, AZ 85260

PHOENIX AZ 852
26 AUG 2021 PM 8 L

GS TRUST/5427 S POWER LLC
5427 S SETON
GILBERT, AZ 85295

NIXIE 850 DE 1
RETURN TO SENDER
NO SUCH STREET
UNABLE TO FORWA
BC: 85260362126 *2214

NSS
85295-999955
85260>3621

SEG
8280 E Gelding Rd, Suite 101
Scottsdale, AZ 85260

PHOENIX AZ 852
26 AUG 2021 PM 9 L

1A
8/28

SEG

Exhibit 5

List of Property Owners within 1,000 ft.

Parcel Number	Owner	MAIL_ADDR1	MAIL_CITY	MAIL_STATE	MAIL_ZIP
304-37-001C	UNITED STATES OF AMERICA	3707 N 7TH ST	PHOENIX	AZ	85017
304-37-007, ET AL	GRANITE FIELD INVESTMENTS LLC	PO BOX 151	QUEEN CREEK	AZ	85142
304-37-013D, ET AL	CACTUS GROVE PROPERTIES LLC	1701 S MILL AVE	TEMPE	AZ	85281
304-37-015C	RM2 LLC	3747 E SOUTHERN AVE	PHOENIX	AZ	85040
304-37-015D	APACHE SUN PROPERTIES LLC	1421 S CRESTON CIR	MESA	AZ	85204
304-37-016	1973 AC PROPERTIES LLC	2043 S CONSTELLATION CT	GILBERT	AZ	85295
304-37-017A	5409 S POWER ROAD LLC	415 N DEARBORN 4TH FLOOR	CHICAGO	IL	60654
304-37-018C	GS TRUST/5427 S POWER LLC	5427 S SETON	GILBERT	AZ	85295
304-37-021D	GW-SLB LLC	333 N WILMONT RD NO 227	TUCSON	AZ	85711
304-37-021E	WILLIAM E CLARK JR AND EVELYN J CLARK FAM TR	P O BOX 182571	COLUMBUS	OH	43218
304-37-022C	KESTNER JOSEPH A	PO BOX 67523	PHOENIX	AZ	85082
304-37-023L, ET AL	CITY OF MESA	20 E MAIN ST	MESA	AZ	85201
304-37-023P	HORNE REAL ESTATE INVESTMENTS LLC	9 N BULLMOOSE CIR	CHANDLER	AZ	85224
304-37-023R	AVALON POWER LLC	10611 N HAYDEN RD SUITE D-103	SCOTTSDALE	AZ	85260
304-37-024N	HURD POWER LLC	P O BOX 3475	TULSA	OK	74101
304-37-026A	CHO FREDERICK Y TR	9530 W PROSPECTOR DR	QUEEN CREEK	AZ	85142
304-37-033	HZ PROPS RE LTD	4415 STATE HWY 6	SUGAR LAND	TX	77478
304-37-034	723 21ST PLACE INVESTMENTS LLC	230 BONNIE LN	SANTA BARBARA	CA	93108
304-37-035	MESA HOTEL PARTNERS LLC	2520 E UNIVERSITY DR STE 103	TEMPE	AZ	85281
304-37-036	QQ WP LLC	1380 LEAD HILL BLVD STE 260	ROSEVILLE	CA	95661
304-38-986B	GATEWAY MEDICAL INVESTORS LLC	4301 N 75TH ST STE 203	SCOTTSDALE	AZ	85251
304-39-912	WAL MART STORES INC	1301 SE 10TH ST	BENTONVILLE	AR	72716-0535
304-39-915, ET AL	BC PICO LLC/DRIVE PICO LLC/AUTOMATIC PROPERTIES LLC	11601 SANTA MONICA BLVD	LOS ANGELES	CA	90025
304-39-964	ALAMO GILBERT HOLDINGS LLC	1870 W BITTERS RD NO 103	SAN ANTONIO	TX	78248
304-39-965, ET AL	POWER ROAD RETAIL PROPERTIES LLC	4915 E BASELINE RD SUITE 105	GILBERT	AZ	85234
304-39-967	GATEWAY HOTEL PARTNERS LLC	4915 E BASELINE RD NO 105	GILBERT	AZ	85234
304-39-971	DRAGONFLY CAPITAL HOLDINGS LLC	4915 E BASELINE RD SUITE 105	GILBERT	AZ	85234
304-39-972	POWER ROAD INDUSTRIAL PROPERTIES LLC	4915 E BASELINE RD SUITE 105	GILBERT	AZ	85234
304-39-979, ET AL	LANDMARK LAND INVESTMENTS LLC	4915 E BASELINE RD NO 105	GILBERT	AZ	85234
304-39-981	GR PROPERTY HOLDINGS LLC	6658 S ST ANDREWS CT	GILBERT	AZ	85296