Building Codes:
2018 International Building Code (IBC)
2018 International Existing Building Code (IEBC)
2018 International Residential Code (IRC)
2018 International Energy Conservation Code (IECC)
2018 International Fire Code (IFC)
2018 International Fuel Gas Code (IFGC)
2018 International Mechanical Code (IMC)
2018 International Plumbing Code (IPC)
2018 International Swimming Pool and Spa Code (ISPSC)
2017 National Electrical Code (NEC)

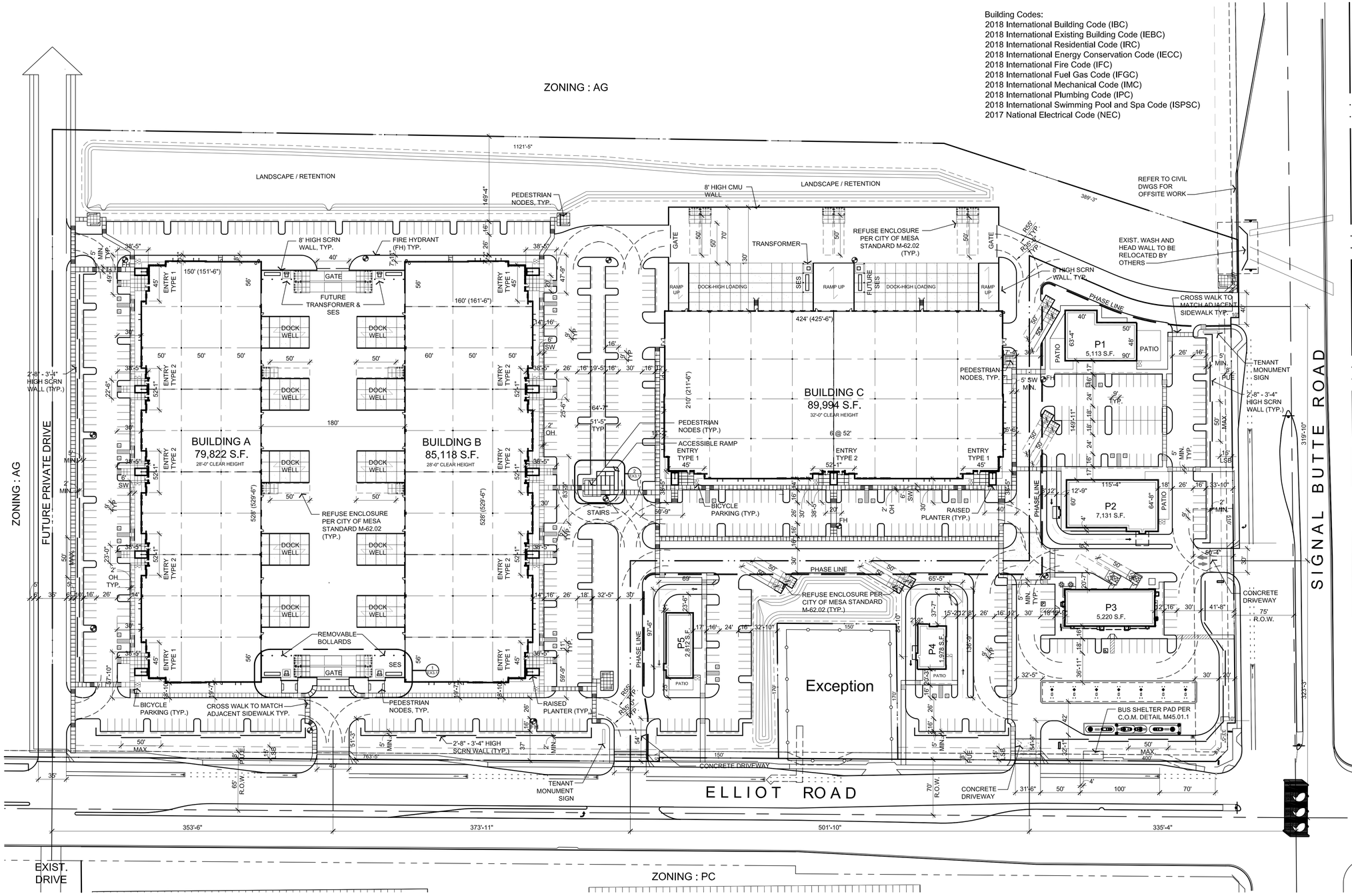

PROJECT DATA

Existing Zoning:	AG
APN#:	A PORTION OF 304-01-006Q
Net Site Area:	1,113,769 S.F. (25.57 AC.)
Building Area:	277,267 S.F.

PROJECT DATA - INDUSTRIAL

Net Site Area:	863,119 S.F. (19.81 AC.)
Building Area:	254,934 S.F.
Coverage :	29.5 %
Impervious Area:	248,157 S.F. / 863,119 S.F. = 71%
Parking Required	
254,934 S.F. @ 25% = 63,734 S.F / 375:	170 Spaces
254,934 S.F. @ 75% = 191,200 S.F / 900:	213 Spaces
Total Parking Required :	383 Spaces
Total Parking Provided :	389 Spaces
ADA Parking Required:	8 Spaces
ADA Parking Provided:	18 Spaces
Bike Parking Required (1/10 Spaces):	39 Spaces
Bike Parking Provided:	40 Spaces
Proposed Height :	VARIES 45'-0" MAX.
Foundation Base	
Entry Plaza (All Entry types in-excess of 900 sf:)	
Entry Type 1:	+/-1,460 S.F.
Entry Type 2:	+/-1,360 S.F.
Building A:	
West Required (15' X 529'-6"):	7,943 S.F.
West Provided:	11,424 S.F.
North Required (5' X 151'-6"):	756 S.F.
North Provided:	1,817 S.F.
South Required (5' X 151'-6"):	756 S.F.
South Provided:	2,304 S.F.
Building B:	
East Required (15' X 529'-6"):	7,943 S.F.
East Provided:	11,424 S.F.
North Required (5' X 161'-6"):	808 S.F.
North Provided:	1,925 S.F.
South Required (5' X 161'-6"):	808 S.F.
South Provided:	2,472 S.F.
Building C:	
South Required (15' X 425'-6"):	6,383 S.F.
South Provided:	8,855 S.F.
West Required (10' X 211'-6"):	2,115 S.F.
West Provided:	2,124 S.F.
East Required (10' X 211'-6"):	2,115 S.F.
East Provided:	3,054 S.F.

PROJECT DATA - COMMERCIAL

Net Site Area:	250,650 S.F. (5.76 AC.)
Building Area:	22,333 S.F.
Coverage :	8.9%
Parking Required:	
Restaurant (9,190 S.F. @ 1/100 S.F.) :	92 Spaces
Patios (3,600 S.F. @ 1/200 S.F.) :	18 Spaces
Retail (7,923 S.F. @ 1/375 S.F.) :	22 Spaces
Service Station (5,220 S.F. @ 1/375 S.F.) :	14 Spaces
Total Parking Required :	146 Spaces
Total Parking Provided :	163 Spaces
ADA Parking Required:	6 Spaces
ADA Parking Provided:	10 Spaces
Bike Parking Required (1/10 Spaces):	16 Spaces
Bike Parking Provided:	16 Spaces
Proposed Height :	26 Feet

PROJECT TEAM

Developer
Thompson Thrift
2398 E. Camelback Rd. Ste. 210
Phoenix, Arizona 85018
Contact: Andrew Call
Ph: (602) 313-8631
Em: acall@thompsonthrift.com

Architect
Butler Design Group
5017 E. Washington St. Ste 107
Phoenix, Arizona 85034
Contact: Glenn Hurd
Ph: (602) 957-1800
ghurd@butlerdesigngroup.com

Civil Engineer
Hunter Engineering
10450 N. 74th Street, Ste 200
Scottsdale, Arizona 85258
Contact: Jeff Hunter
Ph: (480) 991-3985
jhunter@hunterengineeringpc.com

Landscape Architect
Laskin & Associates, Inc
67 E. Weldon Avenue,Ste 230
Phoenix, Arizona 85012
Contact: Hardy Laskin
Ph: (602) 840-7771
hardy@laskindesign.com

SITE PLAN

0 30' 60' 120'

SCALE: 1" = 60'

THOMPSON THRIFT

MESA FIRE CODE NOTES

1. PER MESA AMENDED FIRE CODE SECTION 510.1 NEW BUILDINGS SHALL HAVE APPROVED RADIO COVERAGE FOR EMERGENCY RESPONDERS WITHIN THE BUILDING. BUILDINGS OR STRUCTURES MORE THAN 3 STORIES ABOVE GROUND LEVEL OR BUILDINGS OR STRUCTURES TOTALING 45,000 SQUARE FEET (13 716 M2) OR MORE ON ANY SINGLE FLOOR
2. FIRE SPRINKLERS SYSTEM WILL BE REQUIRED IN BUILDINGS AND STRUCTURES PER MESA FIRE CODE 903.2. UNLESS EXEMPTED BY THE 6 LISTED EXEMPTIONS OF 903.2.1.
3. MESA AMENDED FIRE CODE SECTION 903.3.3.1.1.3.2 BUILDINGS WITH ROOF STRUCTURE OVER 20 FEET. THE MINIMUM DESIGN REQUIREMENTS FOR BUILDINGS WITH THE ROOF STRUCTURE OVER 20 FEET ABOVE THE FINISHED FLOOR SHALL BE FOR RACK STORAGE OF GROUP IV COMMODITIES AS DEFINED IN CHAPTER 32 AND SECTION 903.3.1.1. AND, PER MESA AMENDED FIRE CODE SECTION 903.3.7.1. THE SIZE OF THE FIRE DEPARTMENT CONNECTION AND PIPING IS DEPENDENT ON THE AUTOMATIC SPRINKLER DESIGN FLOW. THE MAXIMUM DESIGN FLOW FOR A 2-½ INCH SIAMESE CONNECTION IS 500 GPM. FOR DESIGN FLOWS GREATER THAN 500 GPM INSTALL A SINGLE 2-½ INCH SIAMESE CONNECTION AND 5-INCH STORZ CONNECTION.

SIGNAL BUTTE & ELLIOT ROAD

Proposed Industrial / Commercial Development

NWC of Elliot and Signal Butte
Mesa, Arizona

VICINITY MAP

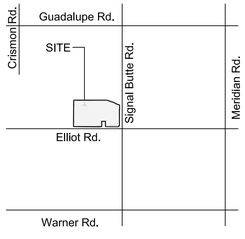

09-10-21 REVISION
07-13-21 19055-ST26

REGISTERED ARCHITECT
CERTIFICATE NO. 22417
RICHARD R. BUTLER
Date Signed 09-10-21
ARIZONA U.S.A.

EX01

SITE PLAN

Butler Design Group, Inc
architects & planners

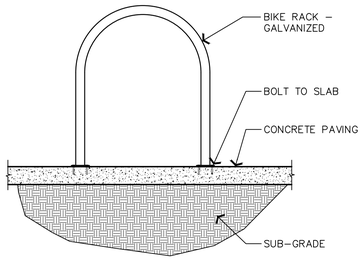

1 BICYCLE RACK SECTION
SCALE: 3/4"=1'-0"

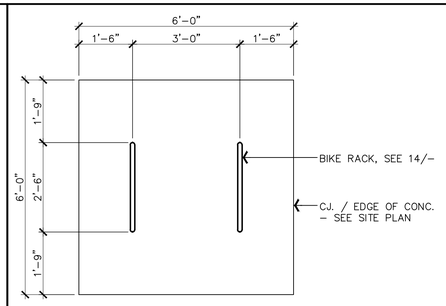

2 BICYCLE RACK PLAN
SCALE: 1/2" = 1'-0"

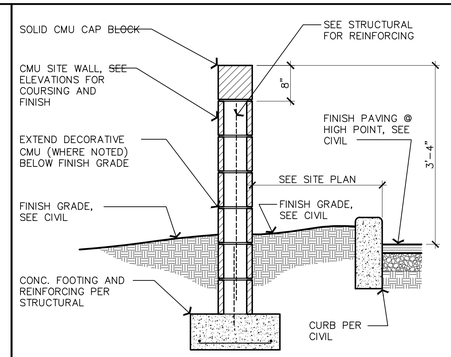

3 PARKING SCREEN WALL SECTION
SCALE: 3/4" = 1'-0"

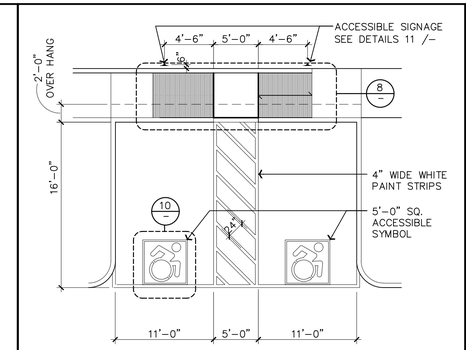

4 ACCESSIBLE STALL & RAMP
SCALE: 1/8" = 1'-0"

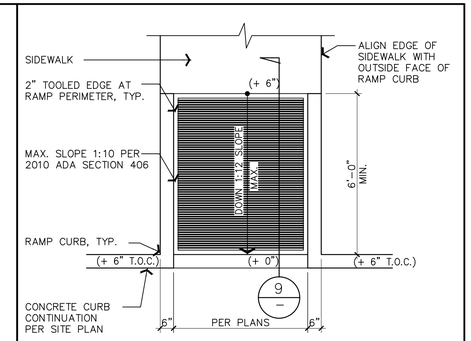

5 IN-LINE ACCESSIBLE RAMP
SCALE: 3/8" = 1'-0"

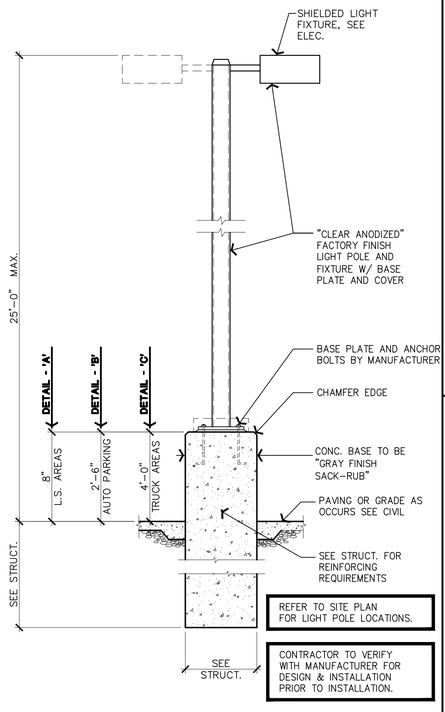

LIGHT POLE SECTION

6 LIGHT POLE DETAIL
SCALE: 1/2" = 1'-0"

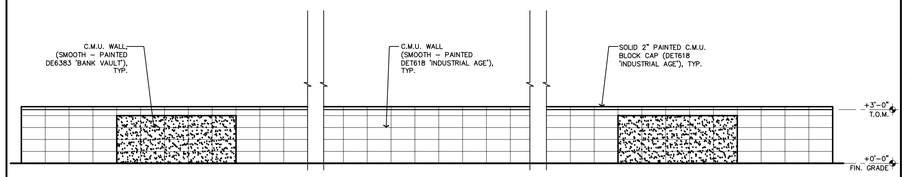

7 3' HIGH C.M.U. SCREEN WALL ELEV.
SCALE: 1/4" = 1'-0"

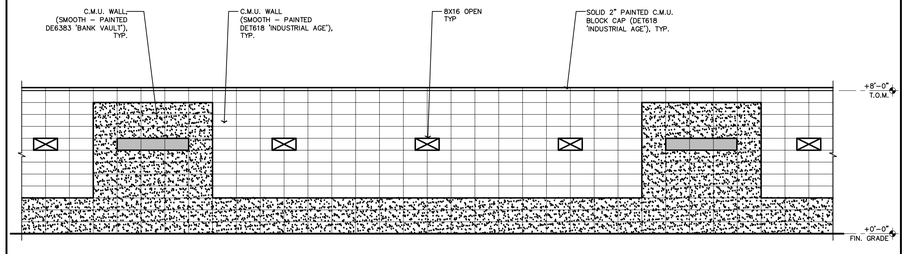

8 8' HIGH C.M.U. WALL ELEV.
SCALE: 1/4" = 1'-0"

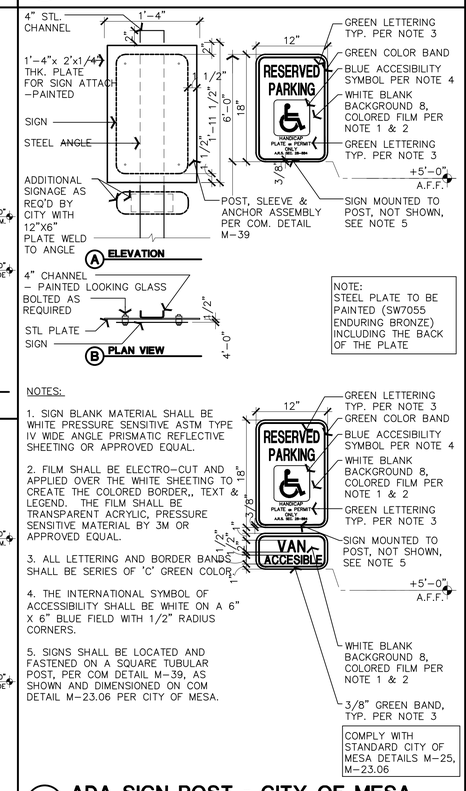

NOTE: STEEL PLATE TO BE PAINTED (SW7055 ENDURING BRONZE) INCLUDING THE BACK OF THE PLATE

NOTES:

1. SIGN BLANK MATERIAL SHALL BE WHITE PRESSURE SENSITIVE ASTM TYPE IV WIDE ANGLE PRISMATIC REFLECTIVE SHEETING OR APPROVED EQUAL.

2. FILM SHALL BE ELECTRO-CUT AND APPLIED OVER THE WHITE SHEETING TO CREATE THE COLORED BORDER,, TEXT & LEGEND. THE FILM SHALL BE TRANSPARENT ACRYLIC, PRESSURE SENSITIVE MATERIAL BY 3M OR APPROVED EQUAL.

3. ALL LETTERING AND BORDER BANDS SHALL BE SERIES OF 'C' GREEN COLOR.

4. THE INTERNATIONAL SYMBOL OF ACCESSIBILITY SHALL BE WHITE ON A 6" X 6" BLUE FIELD WITH 1/2" RADIUS CORNERS.

5. SIGNS SHALL BE LOCATED AND FASTENED ON A SQUARE TUBULAR POST, PER COM DETAIL M-39, AS SHOWN AND DIMENSIONED ON COM DETAIL M-23.06 PER CITY OF MESA.

COMPLY WITH STANDARD CITY OF MESA DETAILS M-25, M-23.06

9 ADA SIGN POST - CITY OF MESA
SCALE: 1" = 1'-0"

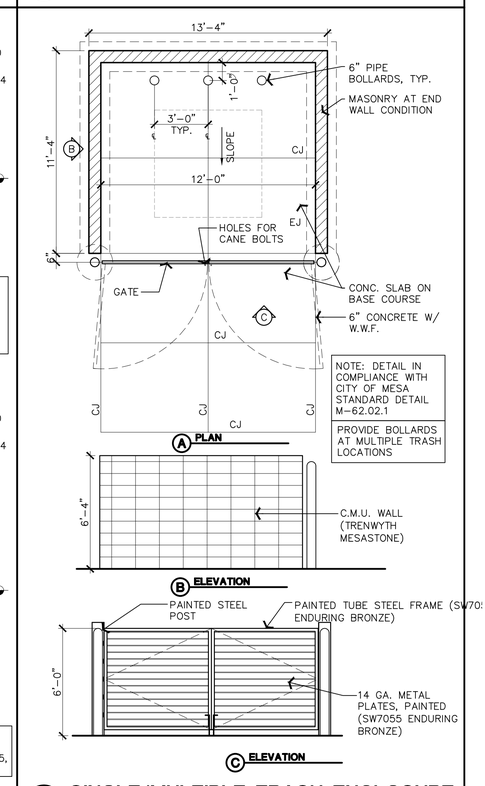

NOTE: DETAIL IN COMPLIANCE WITH CITY OF MESA STANDARD DETAIL M-62.02.1

PROVIDE BOLLARDS AT MULTIPLE TRASH LOCATIONS

10 SINGLE/MULTIPLE TRASH ENCLOSURE
SCALE: 1/4" = 1'-0"

06-07-21 19055

THOMPSON THRIFT

SIGNAL BUTTE & ELLIOT ROAD

Proposed Industrial / Commercial Development

NWC of Elliot and Signal Butte

Mesa, Arizona

EX03

SITE PLAN DETAILS

REGISTERED ARCHITECT CERTIFICATE NO. 22417 RICHARD R. BUTLER Date Signed 06-07-21 ARIZONA, U.S.A.

Butler Design Group, Inc
architects & planners

PATTERN 14386
Fluted Rib

0.5" Depth, 12" On Center

VinyLok®
Styrene - Single Use.
ABS Plastic - Up to 10 reuses.

Fluted Rib

Part Size:	12"coverage, length up to 40'
Max Depth:	0.5"
On Center:	12.0"
Peak:	0.5"
Valley:	11.0"
Draft:	0.25"

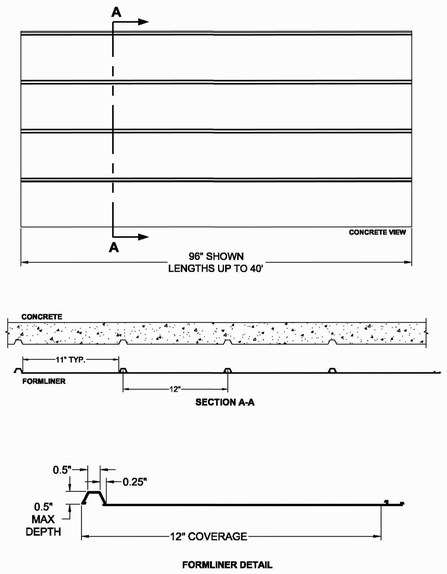

2 FORMLINER DETAIL - PATTERN 14386
SCALE: 1/6" = 1'-0"

PATTERN 14382
Norfolk Rib

0.5"-1" Deep Random Reveals

Vac-U-Form™
Styrene - Single Use.
ABS Plastic - Up to 15 reuses.

Fluted Rib

Part Size:	48"W x 120"H
Max Depth:	1.0"
On Center:	Random
Peak:	0.875"- 2.875"
Valley:	0.875"- 3.0"
Draft:	0.08929"

Additional Backing May Be Requ

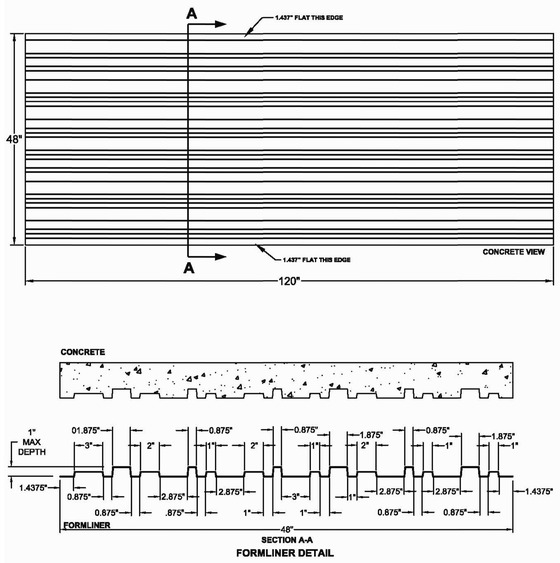

3 FORMLINER DETAIL - PATTERN 14382
SCALE: 1/6" = 1'-0"

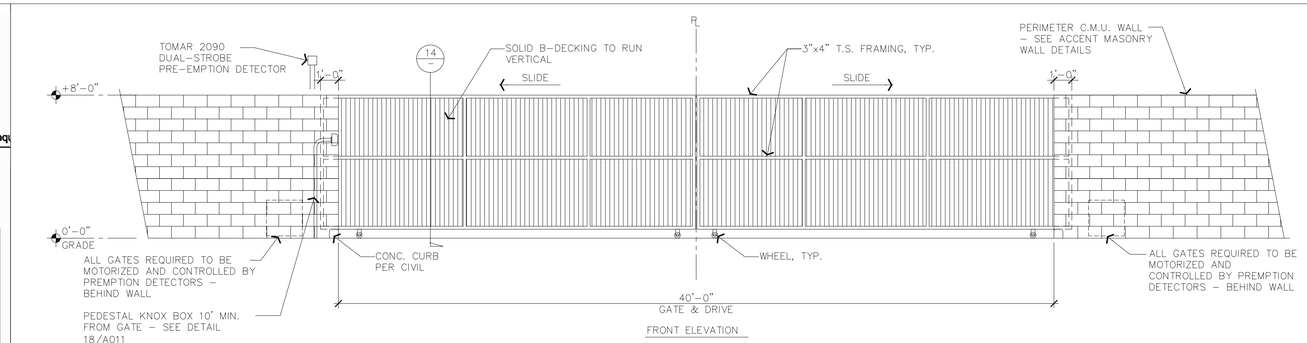

NOTE(S):
1. PAINT STEEL GATES (ALL SIDES), TYP.

1 DOUBLE SLIDING GATE
SCALE: 1/4" = 1'-0"

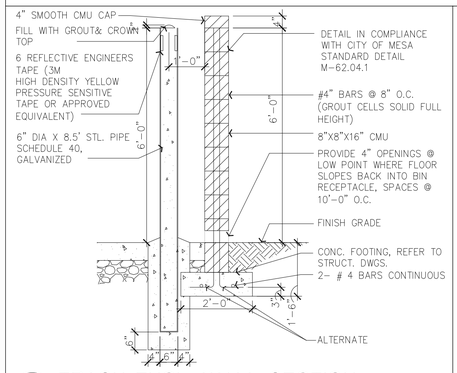

4 TRASH ENCL. WALL SECTION
SCALE: 1/2" = 1'-0"

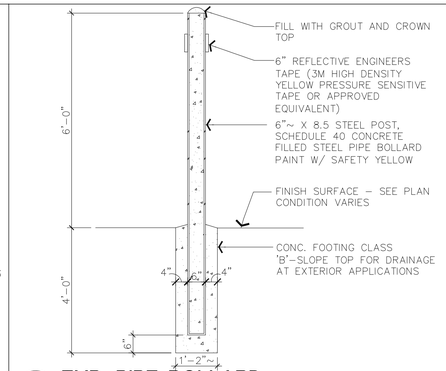

5 TYP. PIPE BOLLARD
SCALE: 1/2" = 1'-0"

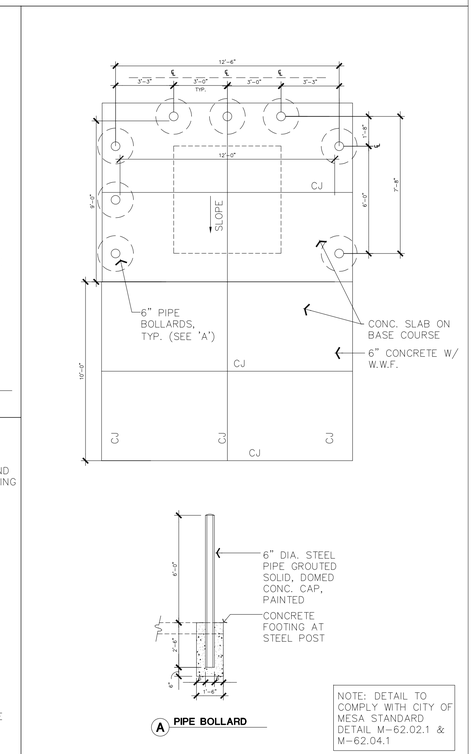

NOTE: DETAIL TO COMPLY WITH CITY OF MESA STANDARD DETAIL M-62.02.1 & M-62.04.1

8 BOLLARD TRASH ENCLOSURE
SCALE: 1/4" = 1'-0"
FOR REFERENCE ONLY

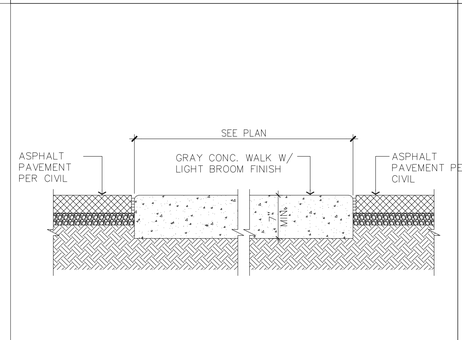

6 CONCRETE WALK AT ASPHALT
SCALE: 1" = 1'-0"

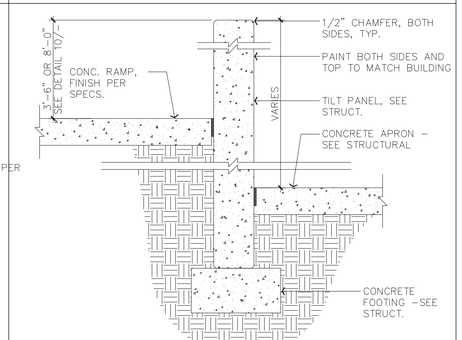

7 RAMP WALL SECTION
SCALE: 3/4"=1'-0"

08-16-21 REVISION
06-07-21 19055

THOMPSON THRIFT

SIGNAL BUTTE & ELLIOT ROAD

Proposed Industrial / Commercial Development

NWC of Elliot and Signal Butte
Mesa, Arizona

EX03.1
SITE PLAN DETAILS

REGISTERED ARCHITECT
CERTIFICATE NO. 22417
RICHARD R. BUTLER
Date Signed 06-16-21
ARIZONA, U.S.A.

Butler Design Group, Inc
architects & planners

1 LOOKING NORTH
SCALE: NTS

2 LOOKING EAST
SCALE: NTS

3 LOOKING SOUTH
SCALE: NTS

4 LOOKING WEST
SCALE: NTS

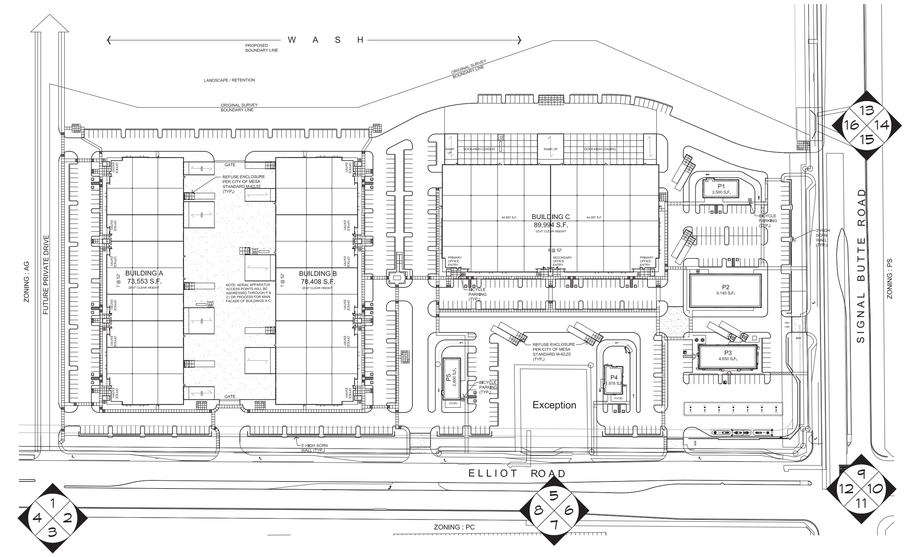

THOMPSON THRIFT

SIGNAL BUTTE & ELLIOT ROAD

Proposed Industrial / Commercial Development

NWC of Elliot and Signal Butte
Mesa, Arizona

EX02
SITE PHOTOS

REGISTERED ARCHITECT
CERTIFICATE NO. 22417
RICHARD R. BUTLER
Date Signed 07-13-21
ARIZONA, U.S.A.

07-13-21 19055

Butler Design Group, Inc
architects & planners

5 LOOKING NORTH
SCALE: NTS

6 LOOKING EAST
SCALE: NTS

7 LOOKING SOUTH
SCALE: NTS

8 LOOKING WEST
SCALE: NTS

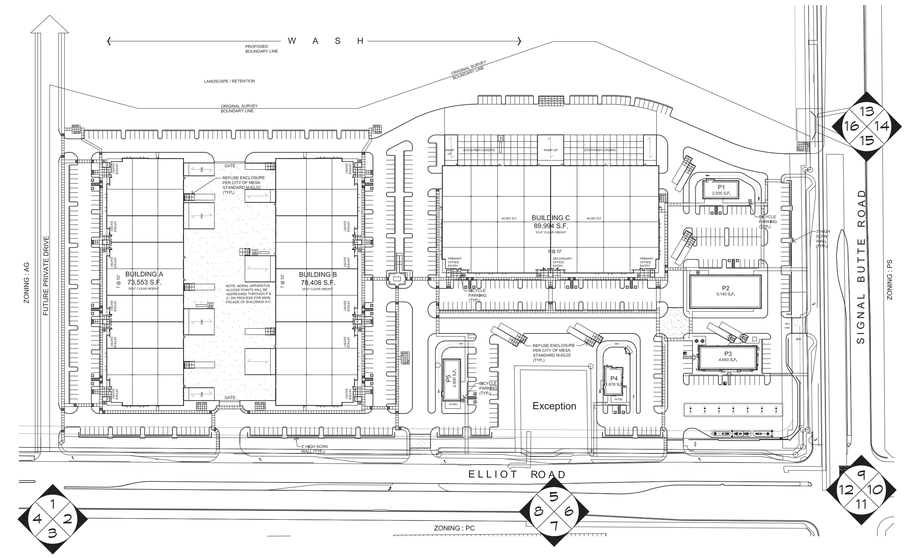

THOMPSON THRIFT

SIGNAL BUTTE & ELLIOT ROAD

Proposed Industrial / Commercial Development

NWC of Elliot and Signal Butte
Mesa, Arizona

EX02.1
SITE PHOTOS

REGISTERED ARCHITECT
CERTIFICATE NO. 22417
RICHARD R. BUTLER
Date Signed 07-13-21
ARIZONA, U.S.A.

07-13-21 19055

Butler Design Group, Inc
architects & planners

9 LOOKING NORTH
SCALE: NTS

10 LOOKING EAST
SCALE: NTS

11 LOOKING SOUTH
SCALE: NTS

12 LOOKING WEST
SCALE: NTS

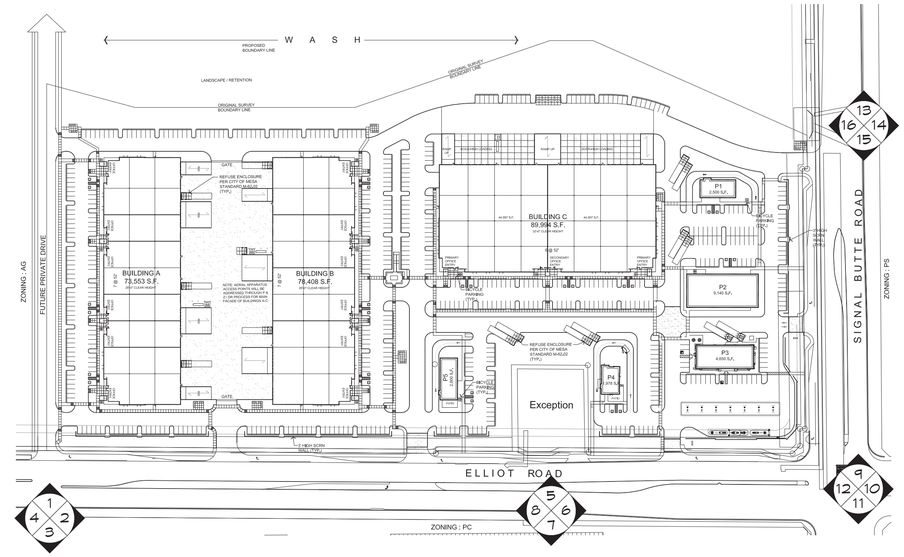

THOMPSON THRIFT

SIGNAL BUTTE & ELLIOT ROAD

Proposed Industrial / Commercial Development

NWC of Elliot and Signal Butte
Mesa, Arizona

EX02.2
SITE PHOTOS

REGISTERED ARCHITECT
CERTIFICATE NO.
22417
RICHARD R.
BUTLER
Date Signed 07-13-21
ARIZONA, U.S.A.

07-13-21 19055

Butler Design Group, Inc
architects & planners

13 LOOKING NORTH
SCALE: NTS

14 LOOKING EAST
SCALE: NTS

15 LOOKING SOUTH
SCALE: NTS

16 LOOKING WEST
SCALE: NTS

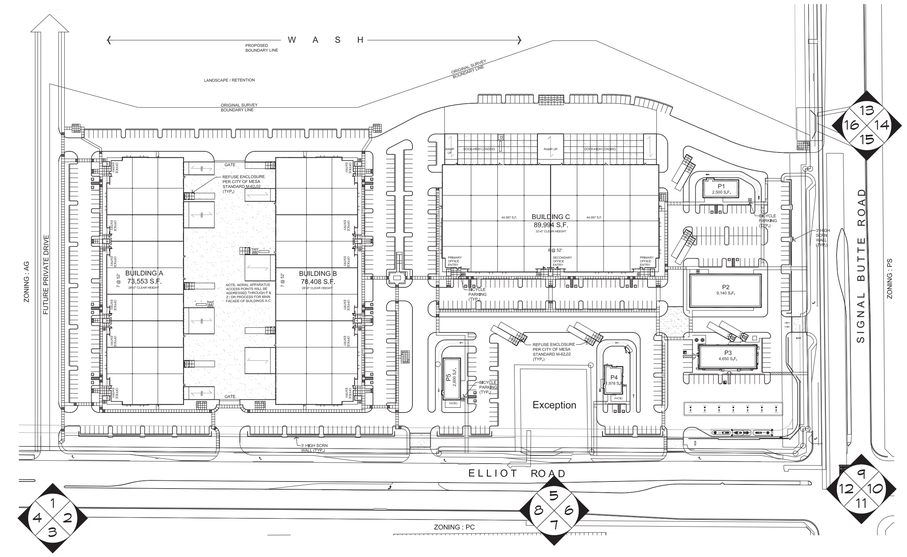

THOMPSON THRIFT

SIGNAL BUTTE & ELLIOT ROAD

Proposed Industrial / Commercial Development

NWC of Elliot and Signal Butte
Mesa, Arizona

EX02.3
SITE PHOTOS

REGISTERED ARCHITECT
CERTIFICATE NO.
22417
RICHARD R.
BUTLER
Date Signed 07-13-21
ARIZONA, U.S.A.

07-13-21 19055

Butler Design Group, Inc
architects & planners