CONCEPTUAL GRADING, DRAINAGE, AND UTILITY PLAN
FOR
E202
202 AND ELLIOT
MESA, ARIZONA 85212

A PORTION OF THE SOUTHWEST QUARTER OF SECTION 9, TOWNSHIP 1 SOUTH, RANGE 7 EAST OF THE GILA AND SALT RIVER BASE AND MERIDIAN, MARICOPA COUNTY, ARIZONA,

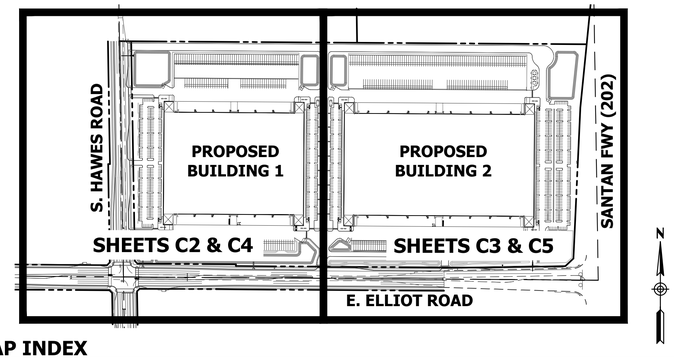

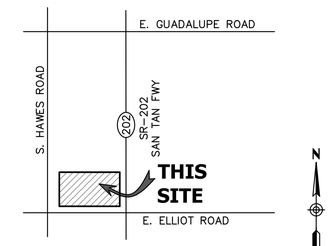

VICINITY MAP

NTS

FEMA INFORMATION

THE CURRENT FEMA FLOOD INSURANCE RATE MAP (FIRM) FOR THIS AREA, MAP NUMBER 04013C 2760L (EFFECTIVE REVISED DATE OCTOBER 16, 2013), DESIGNATES THE PROPERTY WITHIN FLOOD HAZARD ZONE X

ZONE: X IS DEFINED AS AREAS OF 0.2% ANNUAL CHANCE FLOOD; AREAS OF 1% ANNUAL CHANCE FLOOD WITH AVERAGE DEPTHS OF LESS THAN 1 FOOT, OR WITH DRAINAGE AREAS LESS THAN 1 SQUARE MILE; AND AREAS PROTECTED BY LEVEES FROM 1% ANNUAL CHANCE FLOOD.

LEGAL DESCRIPTION

THE LAND REFERRED TO HEREIN BELOW IS SITUATED IN THE COUNTY OF MARICOPA, STATE OF ARIZONA, AND IS DESCRIBED AS FOLLOWS:

A PORTION OF THE SOUTHWEST QUARTER OF SECTION 9, TOWNSHIP 1 SOUTH, RANGE 7 EAST OF THE GILA AND SALT RIVER BASE AND MERIDIAN, MARICOPA COUNTY, ARIZONA, MORE PARTICULARLY DESCRIBED AS FOLLOWS:

COMMENCING AT A BRASS CAP IN HANDHOLE MARKING THE SOUTHWEST CORNER OF SAID SECTION 9; FROM WHICH A BRASS CAP FLUSH MARKING THE WEST QUARTER CORNER OF SAID SECTION 9 BEARS NORTH 00°57'01" WEST, A DISTANCE OF 2635.59 FEET;

THENCE NORTH 00°57'01" WEST, ALONG THE WEST LINE OF THE SOUTHWEST QUARTER OF SAID SAECTION 9, A DISTANCE OF 88.50 FEET;

THENCE NORTH 89°02'59" EAST, A DISTANCE OF 65.00 FEET TO A POINT ON A LINE PARALLEL WITH AND 65.00 FEET EAST OF THE WEST LINE OF THE SOUTHWEST QUARTER OF SAID SECTION 9, SAID POINT ALSO BEING THE POINT OF BEGINNING;

THENCE NORTH 00°57'01" WEST, ALONG SAID PARALLEL LINE, A DISTANCE OF 1228.02 FEET;

THENCE SOUTH 89°37'32" EAST, A DISTANCE OF 2546.02 FEET TO A POINT ON THE WEST RIGHT OF WAY OF THE SANTAN FREEWAY, AS DEFINED IN CONTROL ACCESS DOCUMENT RECORDED AS 2005-0648908, MCR;

THENCE SOUTH 05°43'54" WEST, A DISTANCE OF 356.04 FEET;

THENCE SOUTH 02°36'41" WEST, A DISTANCE OF 844.63 FEET;

THENCE SOUTH 46°50'16" WEST, A DISTANCE OF 62.31 FEET;

THENCE SOUTH 88°55'48" WEST, A DISTANCE OF 472.08 FEET;

THENCE NORTH 89°36'28" WEST, ALONG A LINE PARALLEL WITH AND 65.00 FEET NORTH OF THE SOUTH LINE OF THE SOUTHWEST QUARTER OF SAID SECTION 9, A DISTANCE OF 1368.82 FEET;

THENCE NORTH 00°23'32" EAST, A DISTANCE OF 10.00 FEET;

THENCE NORTH 89°36'28" WEST, ALONG A LINE PARALLEL WITH AND 75.00 FEET NORTH OF THE SOUTH LINE OF THE SOUTHWEST QUARTER OF SAID SECTION 9, A DISTANCE OF 550.15 FEET;

THENCE NORTH 45°16'44" WEST, A DISTANCE OF 21.47 FEET TO THE POINT OF BEGINNING.

SAID DESCRIPTION CONTAINING 71.41 ACRES ±.

MAP INDEX

SHEET INDEX

	CIVIL SHEET
CONCEPTUAL COVER SHEET	C1
CONCEPTUAL GRADING AND DRAINAGE PLAN	C2–C3
CONCEPTUAL UTILITY PLAN	C4–C5
TYPICAL CROSS SECTION	C6

EXISTING LEGEND

RIGHT OF WAY
PROPERTY LINE
CENTERLINE
EASEMENT LINE
WATER LINE — 8" ACP W
WATER LINE — 16" ACP W
SANITARY SEWER LINE — 6" VCP SS
SPOT ELEVATION — +1349.16 P
FIRE HYDRANT
WATER VALVE
IRRIGATION CONTROL VALVE
SANITARY SEWER MANHOLE
SANITARY SEWER CLEANOUT
SIGN
LIGHT POLE
ELECTRICAL RISER
ELECTRICAL CABINET — CAB

PROPOSED LEGEND

DIRECTION OF SLOPE
SEWER LINE — SS
WATER LINE — W
FIRE LINE — FIRE
EASEMENT
SAWCUT
GRADE BREAK
CATCH BASIN
DRYWELL
SPOT ELEVATION — 90.50P
SECTION CALLOUT — 1 / C1
FLOW LINE
BACKFLOW PREVENTOR
TAPPING SLEEVE & VALVE
SANITARY SEWER CLEANOUT
STORM DRAIN PIPE

ABBREVIATIONS

APN	ASSESSOR PARCEL NUMBER	P	PAVEMENT
B/C	BACK OF CURB	PAE	PUBLIC ACCESS EASEMENT
BOT	BOTTOM	PDE	PUBLIC DRAINAGE EASEMENT
BRW	BOTTOM OF RETAINING WALL	PL	PROPERTY LINE
BVC	BEGINNING OF VERTICAL CURVE	POB	POINT OF BEGINNING
C	CONCRETE	POC	POINT OF COMMENCEMENT
℄	CENTERLINE	PUE	PUBLIC UTILITY EASEMENT
CF	CUBIC FEET	PUFE	PUBLIC UTILITY FACILITIES EASEMENT
C&G	CURB & GUTTER	PVI	POINT OF VERTICAL INTERSECTION
CY	CUBIC YARD	PVMT	PAVEMENT
DE	DRAINAGE EASEMENT	P\C	PAVEMENT/CONCRETE
DW	DRYWELL	RCW	RECLAIMED WATER
EA	EACH	R/W	RIGHT OF WAY
EL	ELEVATION	SD	STORM DRAIN
EP	EDGE OF PAVEMENT	SF	SQUARE FEET
ESMT	EASEMENT	SS	SANITARY SEWER
EVC	END OF VERTICAL CURVE	S/W	SIDEWALK
EX	EXISTING	STA	STATION
EXG	EXISTING GRADE	SY	SQUARE YARDS
F/C	FACE OF CURB	TC	TOP OF CURB
FF	FINISH FLOOR	TEL	TELEPHONE
FG	FINISH GRADE	TF	TOP OF FOOTING
FL	FLOWLINE	THR	TOP OF HANDRAIL
FT/FT	FOOT PER FOOT	TPOB	TRUE POINT OF BEGINNING
FM	FORCE MAIN	TRW	TOP OF RETAINING WALL
G	GUTTER	TS	TRAFFIC SIGNAL
GB	GRADE BREAK	TW	TOP OF WALL
GR	GRATE	UGFO	UNDERGROUND FIBER OPTIC
HP	HIGH POINT	UGE	UNDERGROUND ELECTRIC
HW	HIGH WATER	UGT	UNDERGROUND TELEPHONE
IE	INVERT ELEVATION	UTS	UNDERGROUND TRAFFIC SIGNAL
IRR	IRRIGATION	VCP	VITRIFIED CLAY PIPE
LF	LINEAR FEET	VG	VALLEY GUTTER
LIE	LANDSCAPE IRRIGATION EASEMENT	VNAE	VEHICULAR NON-ACCESS EASEMENT
LP	LOW POINT	VOL	VOLUME
MCR	MARICOPA COUNTY RECORDER	VP	VOLUME PROVIDED
ML	MATCH LINE	VR	VOLUME REQUIRED
M	MONUMENT LINE	W	WATER
MUTE	MULTI USE TRAIL EASEMENT	WLE	WATER LINE EASEMENT
NTS	NOT TO SCALE	WTP	WATER TREATMENT PLANT
OHE	OVERHEAD ELECTRIC	WWTP	WASTEWATER TREATMENT PLANT

OWNER

MARWEST ENTERPRISES, LLC
6710 N. SCOTTSDALE RD 140
SCOTTSDALE, ARIZONA 85253
CONTACT: DAVID MARTENS, JD/MBA
PHONE: (602) 390-5403

ARCHITECT

WARE MALCOMB
8181 N VIA DE NEGOCIO
SCOTTSDALE, ARIZONA 85258
PHONE: (480) 800-5291
PHONE: (480) 767-1001
CONTACT: ERIC ZITNY, AIA
EMAIL: EZITNY@WAREMALCOMB.COM

CIVIL ENGINEER

HUNTER ENGINEERING, INC.
10450 N. 74TH STREET, SUITE #200
SCOTTSDALE, ARIZONA 85258
PHONE: (480) 991-3985
CONTACT: LARRY TALBOTT, V.P.
EMAIL: LTALBOTT@HUNTERENGINEERINGPC.COM

APN

304-03-043A AND 304-03-042A

SITE ACREAGE

TOTAL NET AREA = 71.409 ACRES
TOTAL GROSS AREA = 77.264 ACRES

BENCHMARK

CITY OF MESA BRASS TAG ON TOP OF CURB AT THE NORTHEAST CORNER OF HWY 202 FREEWAY AND POWER ROAD. ELEVATION= 1324.10 (CITY OF MESA NAVD88 DATUM)

ONSITE BENCHMARK #1:
IRON BAR IN MEDIAN OF RAY ROAD, 1600"± WEST OF PROPERTY. ELEVATION= 1346.71.

ONSITE BENCHMARK #2:
NORTH BOLT ON FIRE HYDRANT WITH TAG STAMPED "BURY". ELEVATION= 1354.88.

BASIS OF BEARING

BASIS OF BEARING FOR THIS SURVEY IS A BEARING OF SOUTH 00 DEGREES 57 MINUTES 01 SECONDS EAST ALONG THE WEST LINE OF THE SOUTHWEST QUARTER OF SECTION 9, TOWNSHIP 1 SOUTH, RANGE 7 EAST OF THE GILA AND SALT RIVER BASE AND MERIDIAN, MARICOPA COUNTY, ARIZONA, ACCORDING TO THE COMMITMENT FOR TITLE INSURANCE ISSUED BY FIRST ARIZONA TITLE AGENCY, LLC, COMMITMENT NO.: 11-208450, COMMITMENT DATE: AUGUST 12, 2020 8:00 AM

RETENTION CALCULATIONS

TOTAL ONSITE AREA: 71.409 AC
TOTAL OFFSITE AREA: 5.855 AC

RETENTION REQUIRED:
VR=(C)*(P/12)*(A) P=2.2
VR=(0.90)*(2.2/12)*(71.409)*(43,560) = 513,245 CF ONSITE

VR=(C)*(P/12)*(A) P=2.2
VR=(0.95)*(2.2/12)*(5.855)*(43,560) = 44,420 CF OFFSITE

TOTAL REQUIRED = 557,665 CU.FT.

RETENTION PROVIDED:

BASIN 1	148,853 CF
BASIN 1A	30,625 CF
BASIN 2	106,436 CF
BASIN 3	43,103 CF
BASIN 4	38,343 CF
BASIN 5	103,498 CF
BASIN 6	79,171 CF
BASIN 7	12,220 CF
TOTAL	562,249 CF

TOTAL PROVIDED = 562,249 CU.FT.

RETENTION TOTALS:

TOTAL REQUIRED	557,665 CF
TOTAL PROVIDED	562,249 CF
TOTAL EXCESS	4,584 CF

NO.	DATE	REVISION	BY

PURPOSE: CONCEPT SUBMITTAL

DESIGN BY: LT
DRAWN BY: DFK
CHECKED BY: LT

HUNTER ENGINEERING
CIVIL AND SURVEY
10450 NORTH 74TH STREET, SUITE 200
SCOTTSDALE, AZ 85258
T 480 991 3985
F 480 991 3986

Registered Professional Engineer (Civil) CERTIFICATE NO. 42104 LARRY M. TALBOTT Date Signed 12/17/20 ARIZONA, U.S.A.

CONCEPTUAL COVER SHEET FOR E202 202 AND ELLIOT MESA, ARIZONA 85212

CONTACT ARIZONA 811 AT LEAST 2 FULL WORKING DAYS BEFORE YOU BEGIN EXCAVATION
ARIZONA811 BLUE STAKE, INC.
CALL 811 OR CLICK ARIZONA811.COM

THESE PLANS ARE NOT APPROVED FOR CONSTRUCTION WITHOUT AN APPROVED SIGNATURE FROM THE GOVERNING MUNICIPALITY.

PROJECT NAME: E202

HE NO.: MARW008
SCALE: NTS

SHEET: C1

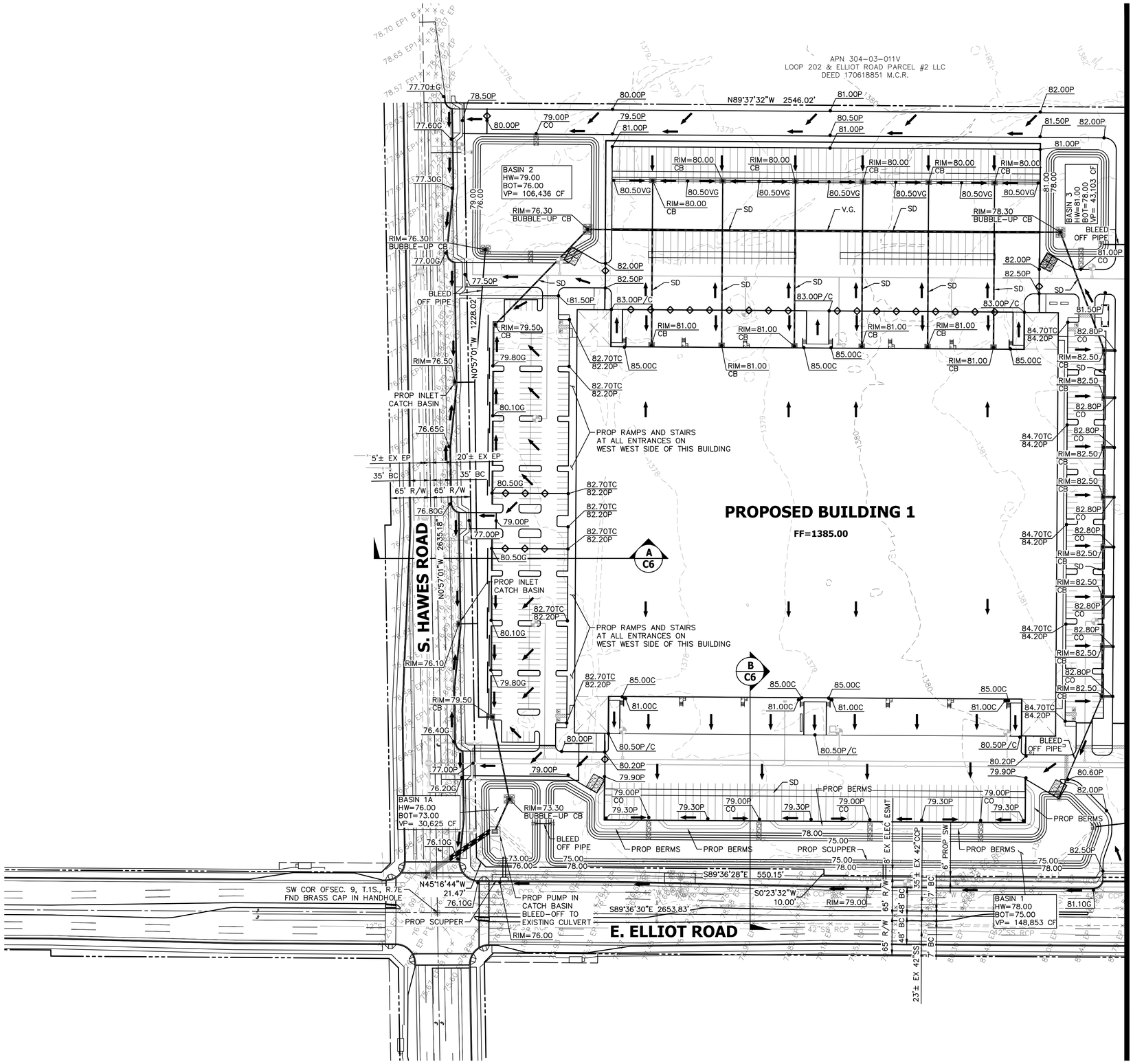

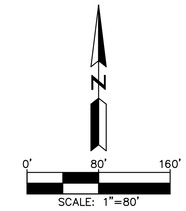

NO.	DATE	REVISION	BY

PURPOSE: **CONCEPT SUBMITTAL**

DESIGN BY: LT
DRAWN BY: DFK
CHECKED BY: LT

HUNTER ENGINEERING
CIVIL AND SURVEY
10450 NORTH 74TH STREET, SUITE 200
SCOTTSDALE, ARIZONA 85258
T 480 991 9985
F 480 991 3986

Registered Professional Engineer (Civil) CERTIFICATE NO. 42104 LARRY M. TALBOTT Date Signed 12/14/18 ARIZONA, U.S.A.

CONCEPTUAL GRADING & DRAINAGE PLAN FOR E202 202 AND ELLIOT MESA, ARIZONA 85212

CONTACT ARIZONA 811 AT LEAST 2 FULL WORKING DAYS BEFORE YOU BEGIN EXCAVATION
AR ZONA811 BLUE STAKE, INC.
CALL 811 OR CLICK ARIZONA811.COM

THESE PLANS ARE NOT APPROVED FOR CONSTRUCTION WITHOUT AN APPROVED SIGNATURE FROM THE GOVERNING MUNICIPALITY.

PROJECT NAME: E202

HE NO.: MARW008
SCALE: 1"=80'

SHEET: **C2**

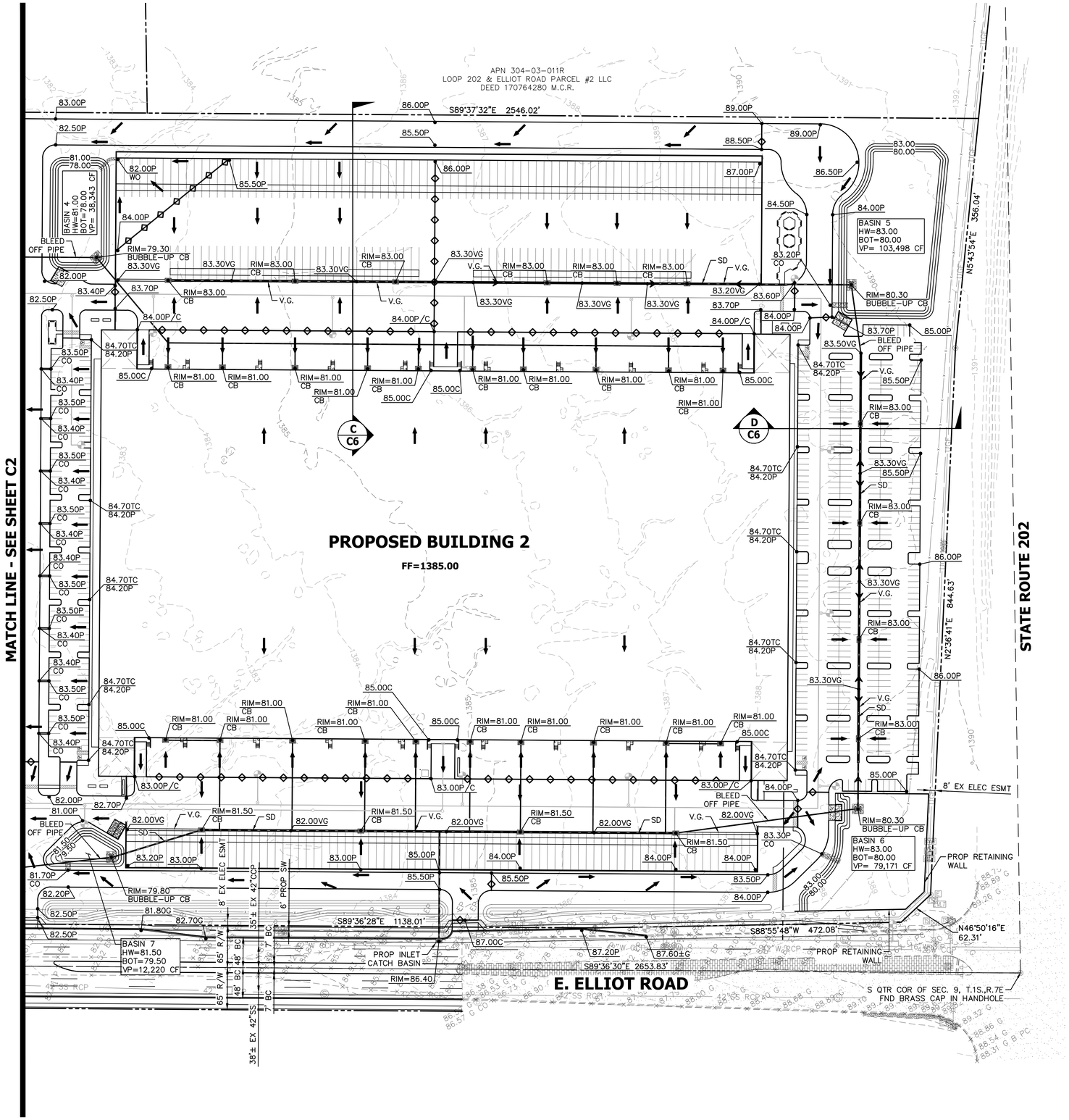

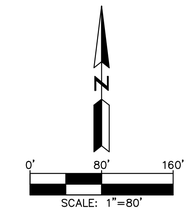

NO.	DATE	REVISION	BY

PURPOSE: **CONCEPT SUBMITTAL**

DESIGN BY: LT
DRAWN BY: DFK
CHECKED BY: LT

HUNTER ENGINEERING
CIVIL AND SURVEY
10450 NORTH 74TH STREET, SUITE 200
SCOTTSDALE, ARIZONA 85258
T 480 991 3985
F 480 991 3986

Registered Professional Engineer (Civil) CERTIFICATE NO. 42104 LARRY M. TALBOTT Expires 12/31/26 ARIZONA, U.S.A.

CONCEPTUAL GRADING & DRAINAGE PLAN FOR E202 202 AND ELLIOT MESA, ARIZONA 85212

CONTACT ARIZONA 811 AT LEAST 2 FULL WORKING DAYS BEFORE YOU BEGIN EXCAVATION
AR ZONA811 BLUE STAKE, INC.
CALL 811 OR CLICK ARIZONA811.COM

THESE PLANS ARE NOT APPROVED FOR CONSTRUCTION WITHOUT AN APPROVED SIGNATURE FROM THE GOVERNING MUNICIPALITY.

PROJECT NAME: E202

HE NO.: MARW008
SCALE: 1"=80'

SHEET: **C3**

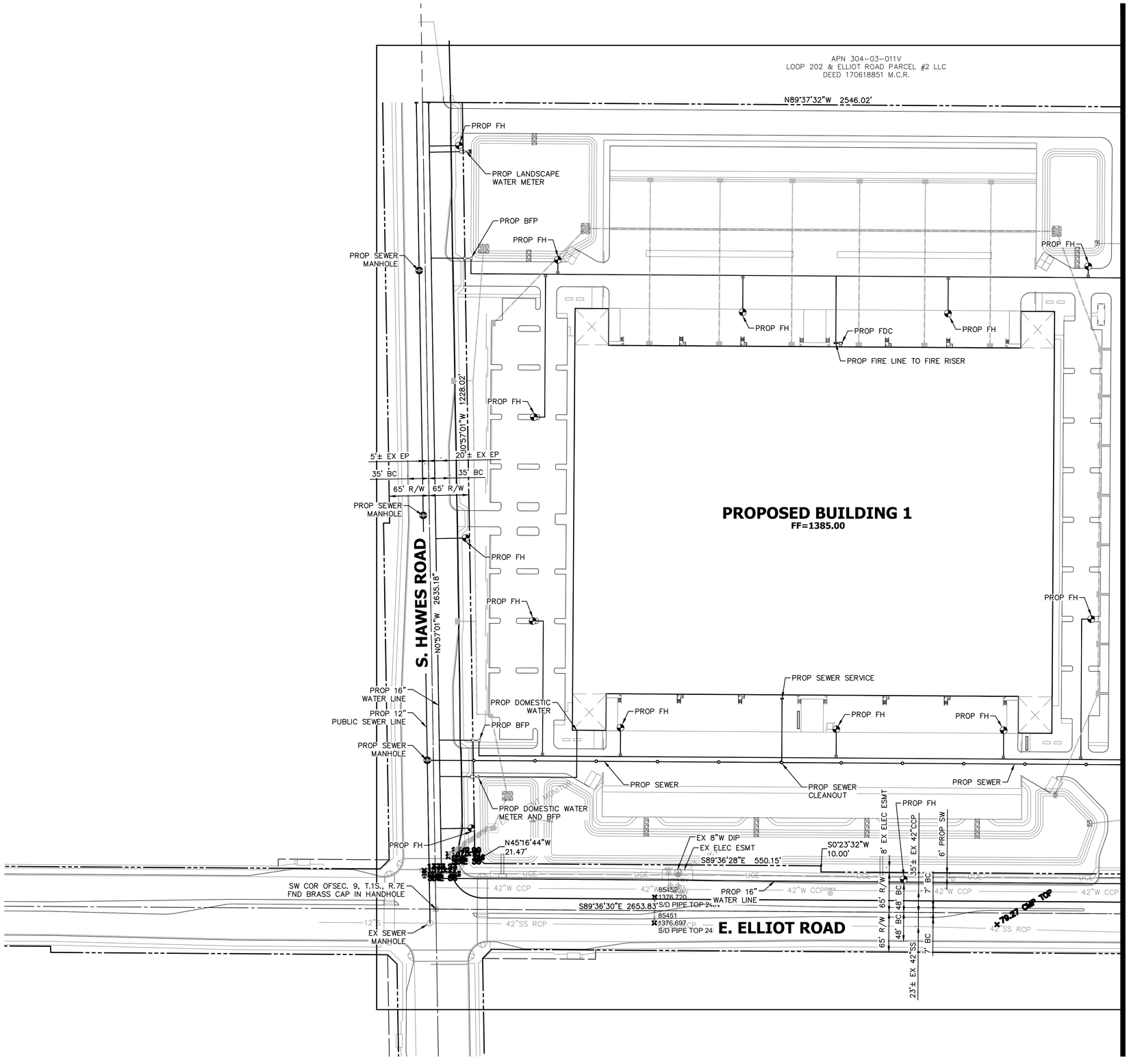

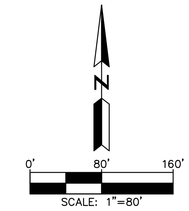

NO.	DATE	REVISION	BY

PURPOSE: **CONCEPT SUBMITTAL**

DESIGN BY: LT
DRAWN BY: DFK
CHECKED BY: LT

HUNTER ENGINEERING
CIVIL AND SURVEY
10450 NORTH 74TH STREET, SUITE 200
SCOTTSDALE, AZ 85258
T 480 991 3985
F 480 991 3986

State Registered Professional Engineer (Civil)
CERTIFICATE NO. 42104
LARRY M. TALBOTT
Date Signed 12/14/20
ARIZONA, U.S.A.

CONCEPTUAL UTILITY PLAN FOR E202 202 AND ELLIOT MESA, ARIZONA 85212

CONTACT ARIZONA 811 AT LEAST 2 FULL WORKING DAYS BEFORE YOU BEGIN EXCAVATION
ARIZONA811
BLUE STAKE, INC.
CALL 811 OR CLICK ARIZONA811.COM

THESE PLANS ARE NOT APPROVED FOR CONSTRUCTION WITHOUT AN APPROVED SIGNATURE FROM THE GOVERNING MUNICIPALITY.

PROJECT NAME: E202

HE NO.: MARW008
SCALE: 1"=80'

SHEET: **C4**

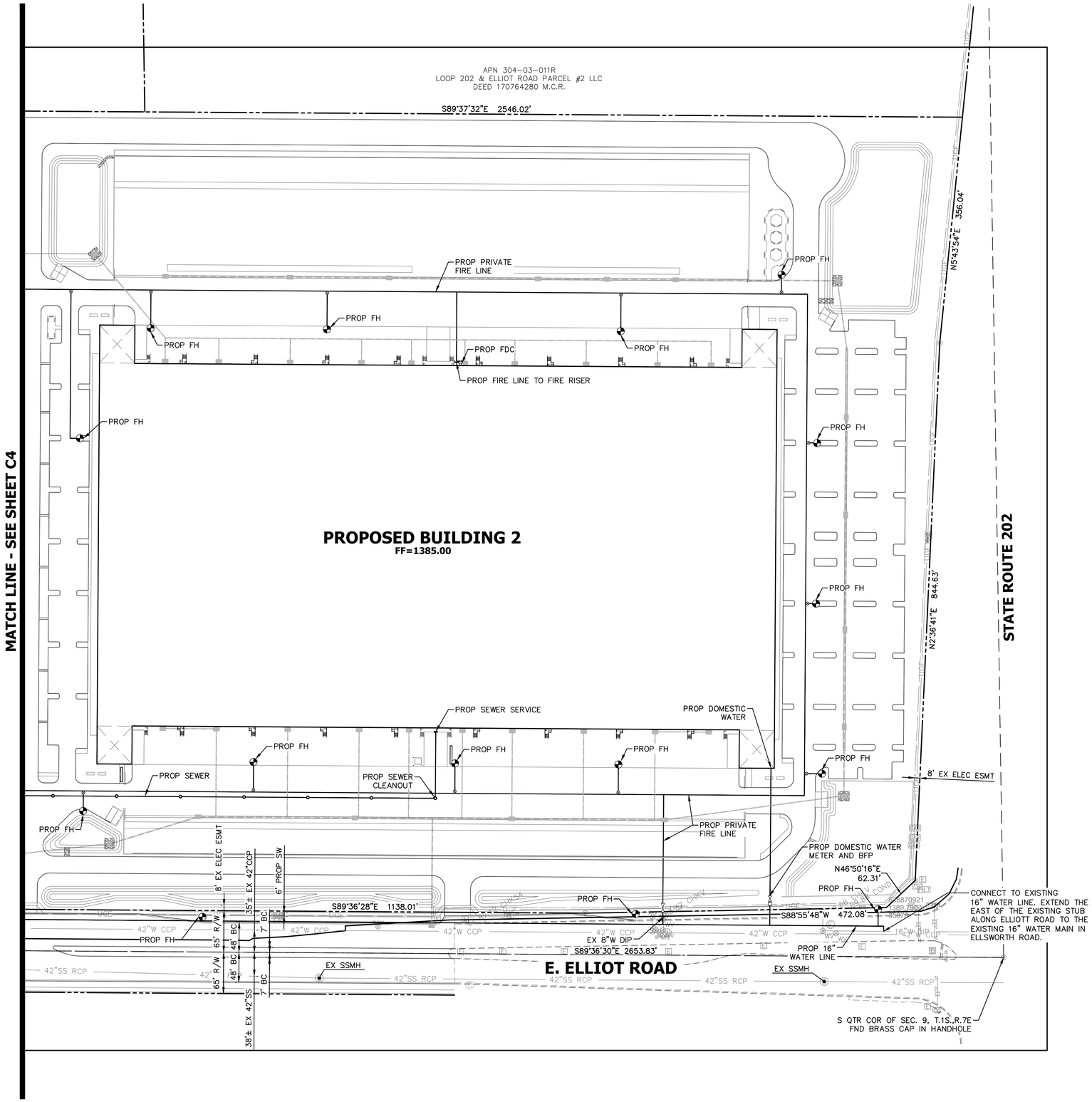

0' 80' 160'
SCALE: 1"=80'

NO.	DATE	REVISION	BY

PURPOSE: **CONCEPT SUBMITTAL**

DESIGN BY: LT
DRAWN BY: DFK
CHECKED BY: LT

HUNTER ENGINEERING CIVIL AND SURVEY
10450 NORTH 74TH STREET, SUITE 200
SCOTTSDALE, ARIZONA 85258
T 480 991 9588
F 480 991 3986

Registered Professional Engineer (Civil) CERTIFICATE NO. 42104 LARRY M. TALBOTT Date Signed 12/14/20 ARIZONA U.S.A.

CONCEPTUAL UTILITY PLAN FOR E202 202 AND ELLIOT MESA, ARIZONA 85212

CONTACT ARIZONA 811 AT LEAST 2 FULL WORKING DAYS BEFORE YOU BEGIN EXCAVATION
ARIZONA811 BLUE STAKE, INC.
CALL 811 OR CLICK ARIZONA811.COM

THESE PLANS ARE NOT APPROVED FOR CONSTRUCTION WITHOUT AN APPROVED SIGNATURE FROM THE GOVERNING MUNICIPALITY.

PROJECT NAME: E202

HE NO.: MARW008
SCALE: 1"=80'

SHEET: **C5**

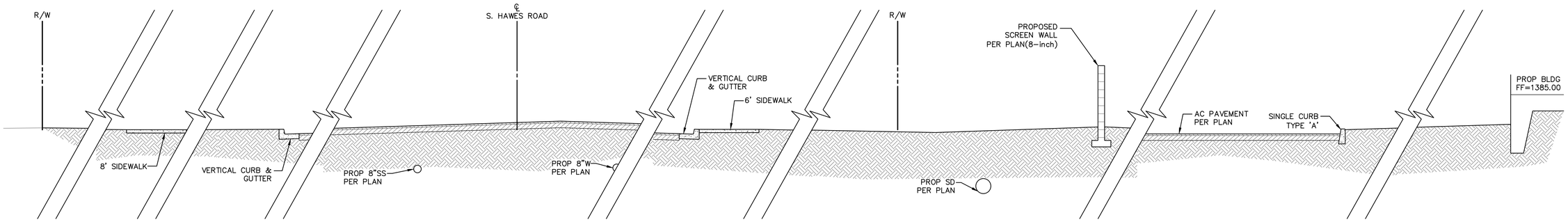

A TYPICAL CROSS SECTION

N.T.S

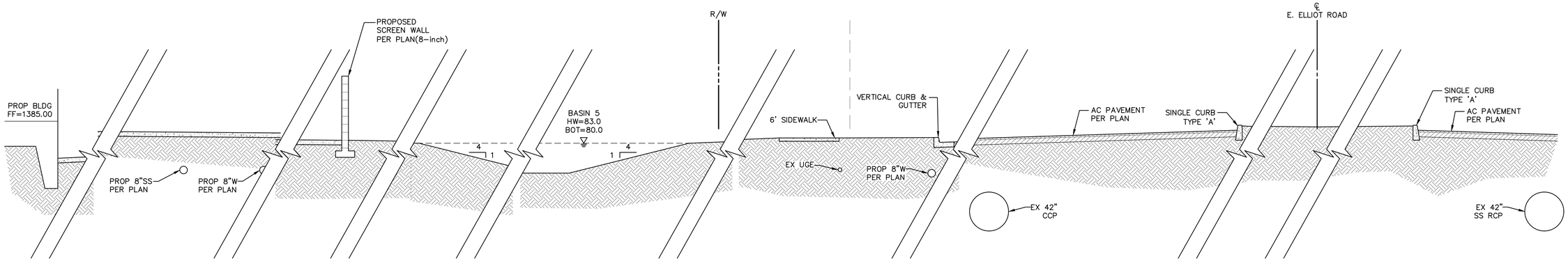

B TYPICAL CROSS SECTION

N.T.S

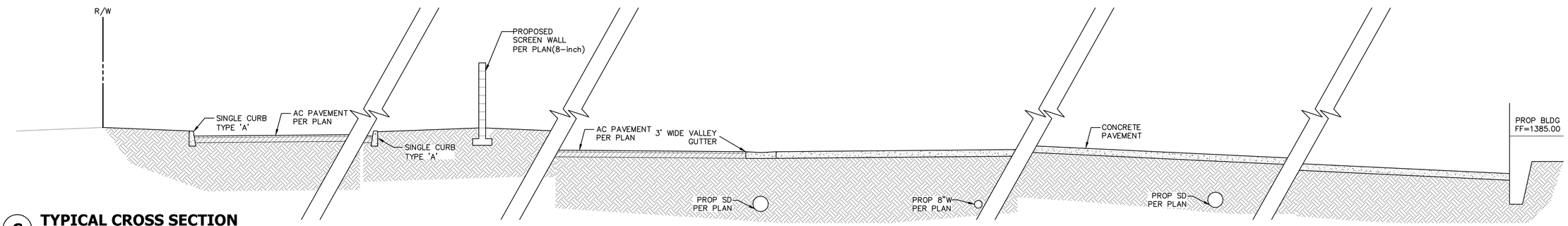

C TYPICAL CROSS SECTION

N.T.S

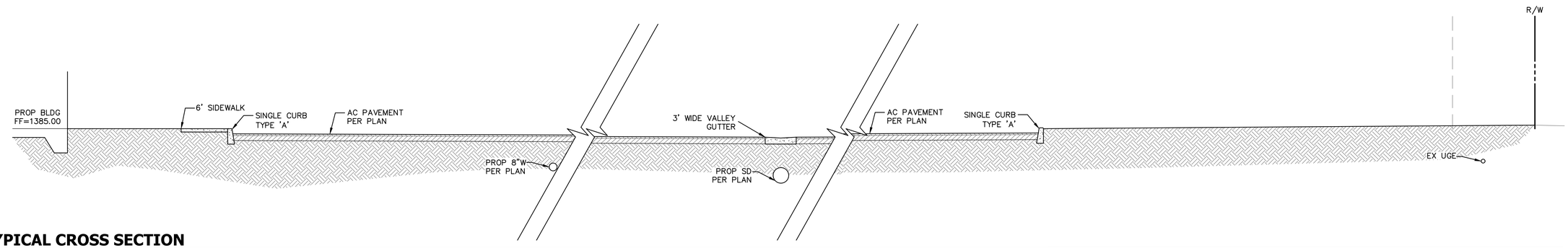

D TYPICAL CROSS SECTION

N.T.S

NO.	DATE	REVISION	BY

PURPOSE: **CONCEPT SUBMITTAL**

DESIGN BY: LT
DRAWN BY: DFK
CHECKED BY: LT

HUNTER ENGINEERING
CIVIL AND SURVEY
10450 NORTH 74TH STREET, SUITE 200
SCOTTSDALE, AZ 85258
T 480 991 3985
F 480 991 3986

Registered Professional Engineer (Civil) CERTIFICATE NO. 42104 LARRY M. TALBOTT Date Signed 12/14/23 ARIZONA U.S.A.

TYPICAL CROSS SECTION FOR E202 202 AND ELLIOT MESA, ARIZONA 85212

CONTACT ARIZONA 811 AT LEAST 2 FULL WORKING DAYS BEFORE YOU BEGIN EXCAVATION
ARIZONA811 BLUE STAKE, INC.
CALL 811 OR CLICK ARIZONA811.COM

THESE PLANS ARE NOT APPROVED FOR CONSTRUCTION WITHOUT AN APPROVED SIGNATURE FROM THE GOVERNING MUNICIPALITY.

PROJECT NAME: E202

HE NO.: MARW008
SCALE: NTS

SHEET: C6