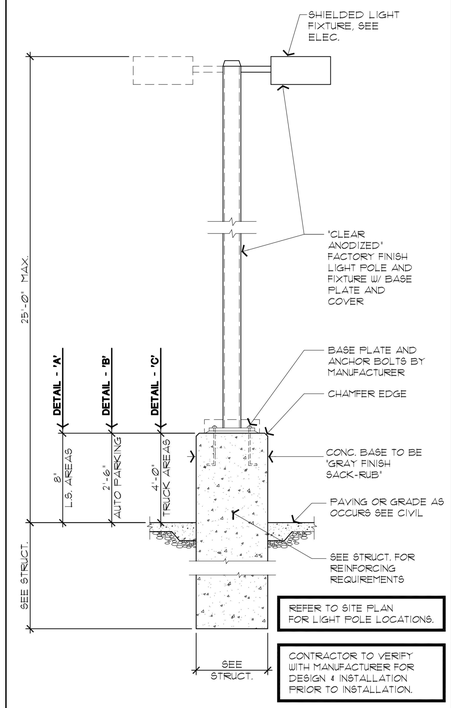

LIGHT POLE SECTION

1 LIGHT POLE DETAIL
SCALE: 1/2" = 1'-0"

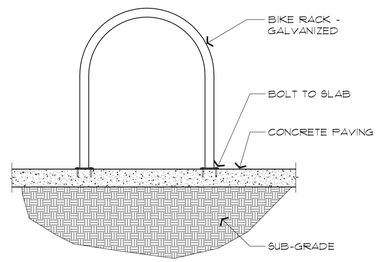

2 BICYCLE RACK SECTION
SCALE: 3/4"=1'-0"

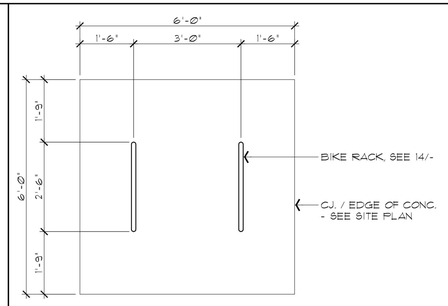

3 BICYCLE RACK PLAN
SCALE: 1/2" = 1'-0"

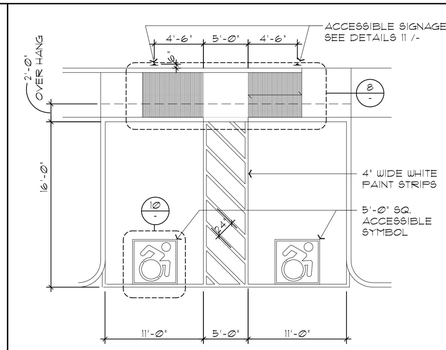

4 ACCESSIBLE STALL & RAMP
SCALE: 1/8" = 1'-0"

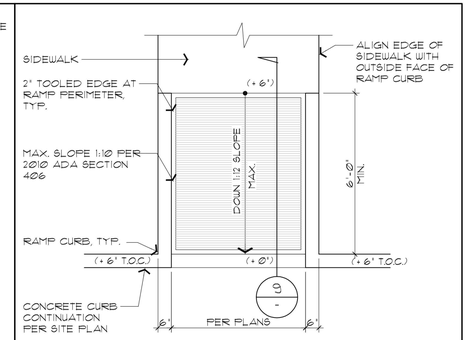

5 IN-LINE ACCESSIBLE RAMP
SCALE: 3/8" = 1'-0"

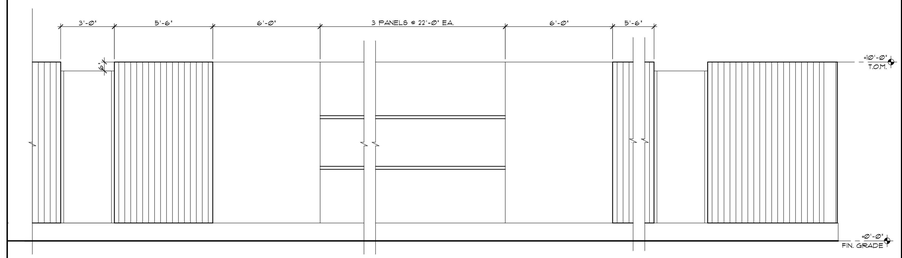

6 10' HIGH CONC. SCREEN WALL ELEV.
SCALE: 1/4" = 1'-0"

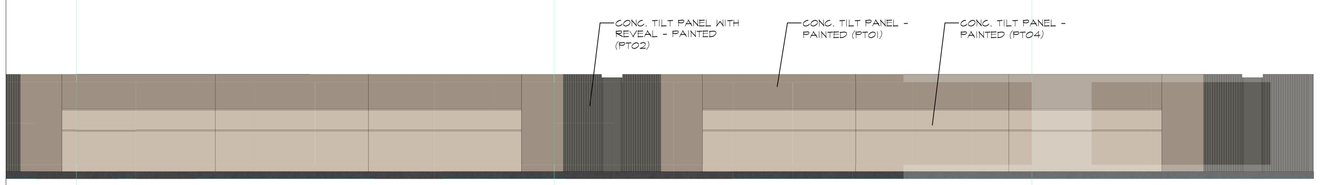

7 10' HIGH SCREEN WALL ELEV
NTS

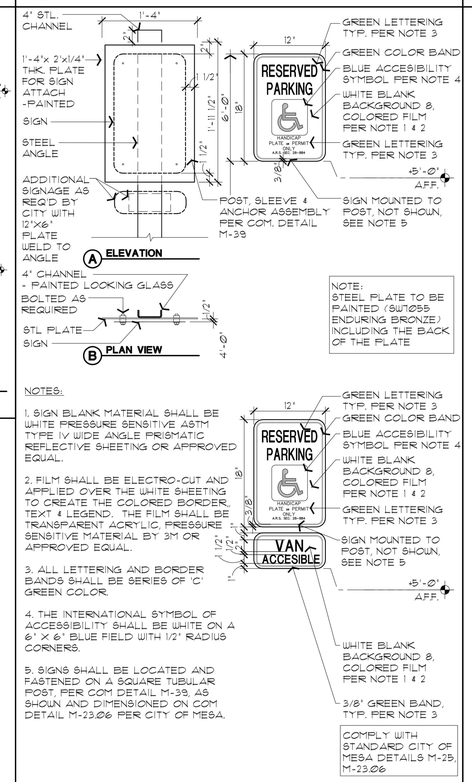

NOTES:

1. SIGN BLANK MATERIAL SHALL BE WHITE PRESSURE SENSITIVE ASTM TYPE IV WIDE ANGLE PRISMATIC REFLECTIVE SHEETING OR APPROVED EQUAL.

2. FILM SHALL BE ELECTRO-CUT AND APPLIED OVER THE WHITE SHEETING TO CREATE THE COLORED BORDER, TEXT & LEGEND. THE FILM SHALL BE TRANSPARENT ACRYLIC, PRESSURE SENSITIVE MATERIAL BY 3M OR APPROVED EQUAL.

3. ALL LETTERING AND BORDER BANDS SHALL BE SERIES OF 'C' GREEN COLOR.

4. THE INTERNATIONAL SYMBOL OF ACCESSIBILITY SHALL BE WHITE ON A 6" X 6" BLUE FIELD WITH 1/2" RADIUS CORNERS.

5. SIGNS SHALL BE LOCATED AND FASTENED ON A SQUARE TUBULAR POST, PER COM DETAIL M-39, AS SHOWN AND DIMENSIONED ON COM DETAIL M-23.06 PER CITY OF MESA.

8 ADA SIGN POST - CITY OF MESA
SCALE: 1" = 1'-0"

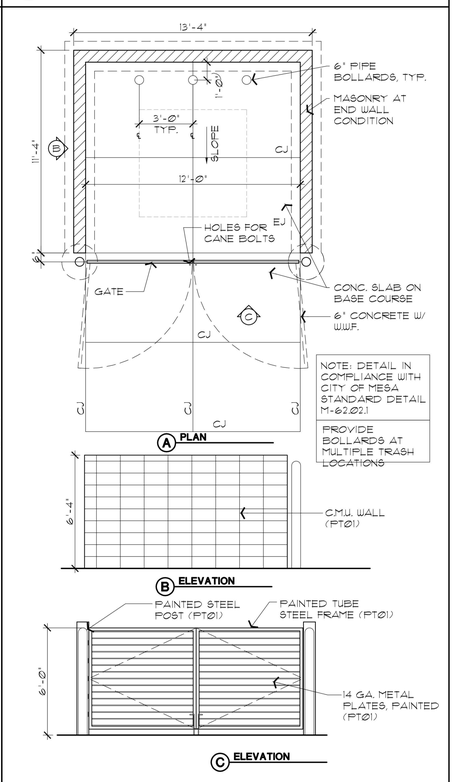

9 SINGLE/MULTIPLE TRASH ENCLOSURE
SCALE: 1/4" = 1'-0"

03-28-22
21061_ST12

MERIT PARTNERS

LEGACY BUSINESS PARK

Crismon Road & Pecos Road

Mesa, Arizona

REGISTERED ARCHITECT CERTIFICATE NO. 22417 RICHARD R. BUTLER EXPIRES 03-28-2022 ARIZONA U.S.A.

Butler Design Group, Inc
architects & planners