LANDSCAPE LEGEND

Furnish and install landscape material per plans, details and specifications. All plant material to meet ANA specifications and be of sound health and appearance. Landscape Architect to hand select and tag all trees for project.

Trees	Size	Qty
Prosopis velutina *velvet mesquite*	24" box 1.5" caliper	3
Pistacia x Red Push *red push pistache*	36" box 2.5" caliper	11
Sophora secundiflora *texas mountain laurel*	36" box 2.0" caliper	5
Acacia willardiana *palo blanco*	24" box 1.5" caliper	10
Caesalpinia cacalaco Smoothie *thornless cascalote*	24" box 1.75" caliper	6
Phoenix dactylifera *date palm*	15' tall skinned	3
Existing tree to remain in place		

Shrubs / Ground Covers	Size	Qty
Bauhinia lunariodes 'White' *chihuahuan orchid shrub*	5 gallon	3
Dodonea viscosa *hop seed*	5 gallon	14
Salvia clevelandii *cleveland sage*	5 gallon	30
Justicia californica *chuparosa*	5 gallon	35
Calliandra californica *baja fairy duster*	5 gallon	12
Wedelia texana *devil's river*	5 gallon	41
Salvia leucantha *mexican bush sage*	1 gallon	12
Setcreasea pallida *purple heart*	1 gallon	23
Cacti / Succulents	**Size**	**Qty**
Yucca rostrata *beaked yucca*	24" box specimen	2
Hesperaloe parviflora 'breaklights' *'breaklights' hesperaloe*	5 gallon	54
Agave sp. *agave*	5 gallon	1
Euphorbia antisyphilitica *candelilla*	5 gallon	57
Aloe x Blue Elf *blue elf*	5 gallon	151
Brahea armata *mexican blue palm*	24" box	9
Portulacaria afra minima *elephant food*	1 gallon	8
Aloe wickensii *aloe wickensii*	5 gallon	4

HARDSCAPE MATERIAL LEGEND

Furnish and install all material per plans, details, and specs.

Concrete - Sidewalk

refer to civil plans and site plan for details and specifications

GROUND COVER MATERIAL LEGEND

Furnish and install all material per plans, details, and specs.

01 Decorative rock

type: screened rock
size: 1/2"
color: express gold
depth: 2"
notes: install in all landscape planting areas as indicated on plans

LANDSCAPE KEY NOTES

1. Property line
2. Sight visibility triangle
3. Street landscape border
4. Interior landscape border
5. Pavement - refer to civil
6. Concrete sidewalk - refer to civil
7. Decorative rock typ. - all landscape areas
8. Vegetated screen
9. Existing wall
10. Existing sidewalk
11. Bicycle parking - refer to site plan
12. Monument sign - refer to site plan
13. Building setback - refer to site plan
14. Building/structure overhead, typ.
15. Existing fire hydrant
16. 40" Split-face column w/ concrete cap - refer to detail 9 sheet L2-01
17. 32" Split-face cmu screen wall w/ concrete cap - refer to detail 8 sheet L2-01
18. Storm drain - refer to civil
19. Planter - refer to architectural plans - topdress w/ 1/2" black mexican beach pebble 1" depth min.

Two working days before you dig, CALL FOR THE BLUE STAKES
1-800-782-5348
1-800-STAKE-IT
Blue Stake Center

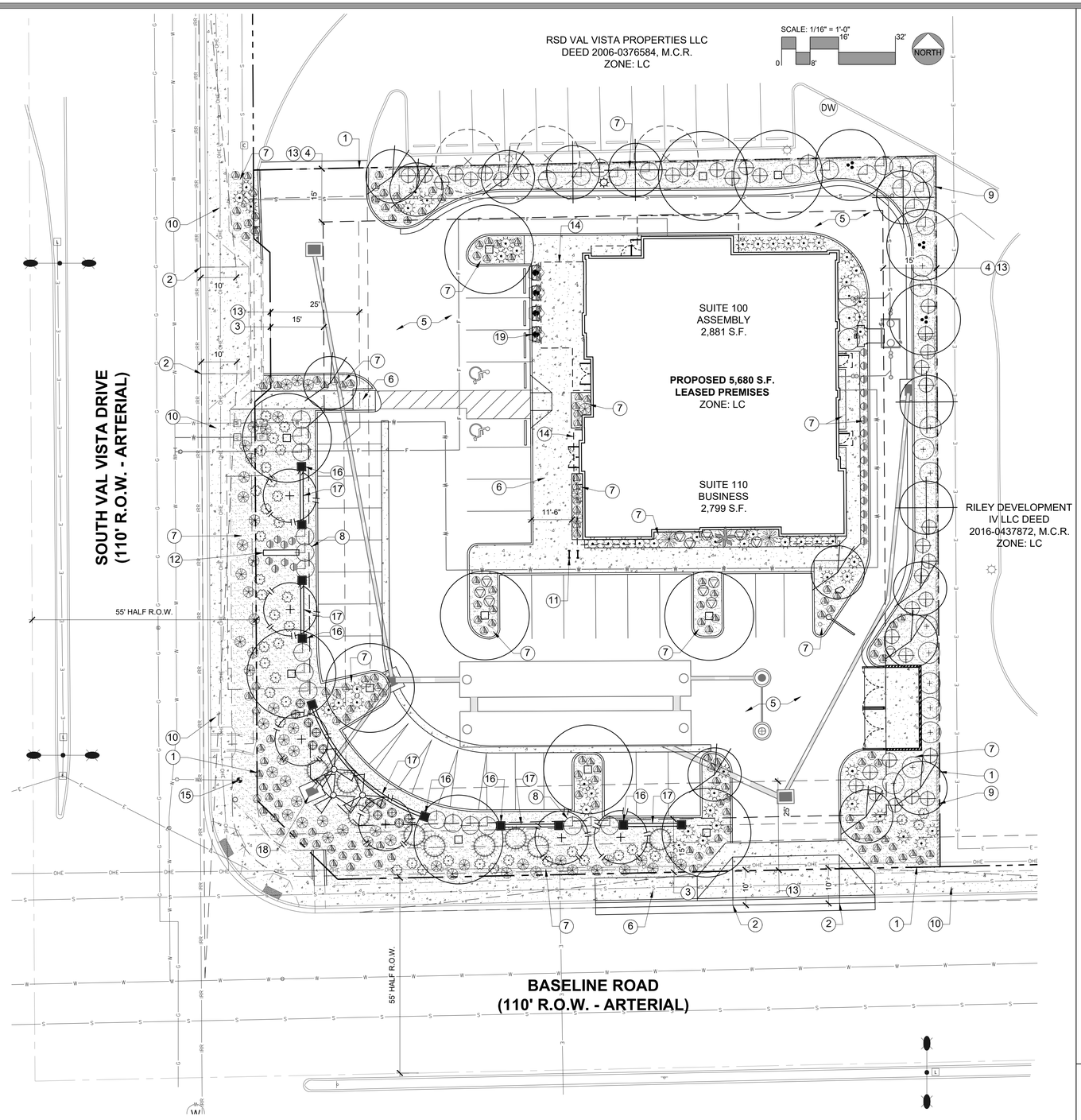

SHEET INDEX

L1-01 Landscape plan
L1-02 Irrigation plan
L2-01 Landscape details
L2-02 Irrigation details

CITY OF MESA GENERAL LANDSCAPE NOTES:

1. The Design on these plans is only approved by the City in scope and not in detail. Construction quantities on these plans are not verified by the City. Approval of these plans are for permit purposes only and shall not prevent the City from requiring correction of errors in the plans where such errors are subsequently found to be in violation of any law, ordinance, health, safety, or other design issues.
2. Construction within the right-of-way shall conform to the latest applicable Maricopa Association of Governments (MAG) Uniform Standard Specifications and Details and the latest City of Mesa Supplement to the MAG Uniform Standard Specifications and Details.
3. Final building permit cannot be obtained until bonding or approved assurances are provided for the landscaping within the right-of-way.
4. No plant substitutions, type, size, or quantity, or deviations from the approved landscape or irrigation plans, are allowed without prior approval from the City of Mesa Landscape.
5. All plant material and specifications shall conform to the Arizona Nurseryman Association standards.
6. All Right-Of-Way and City required (perimeter, retention, and parking) plant material shall be in compliance with the Department of Water Resources low water use plant list.
7. The proposed irrigation system shall include any modifications required to tie the existing City of Mesa irrigation system in Right-Of-Way to the proposed system. All through irrigation systems in the Right-Of-Way shall be maintained. The contractor shall be responsible for capping and/or abandoning existing irrigation to plant materials and providing new irrigation to the existing plant material, in Right-Of-Way, per the approved plan.
8. Walls are not approved as part of the landscape plan but are shown for reference only.
9. Trees adjacent to pedestrian walkways should have a minimum canopy clearance of six feet eight inches (6'8").
10. P.V.C. pipe laterals are required. A maximum of five feet (5') of poly tubing off of the P.V.C. pipe lateral is allowed. No poly tubing laterals are allowed.
11. Plant quantities and caliper sizes, per the specific zoning requirements for this site, provided in the legend on the approved plans are required to be installed in the field. Any deviations from the plan will require a revision to the approved plan. **Note:** Minimum caliper size is a zoning requirement. If the minimum caliper cannot be met at box size that is specified, then the box size must be increased to meet caliper requirements.

LANDSCAPE BORDER REQUIREMENTS

North

interior border @ 100'	required	provided
trees	6	6
shrubs	35	35

East

interior border @ 200'	required	provided
trees	6	6
shrubs	40	40

South (Baseline Rd.)

street border @ 165'	required	provided
trees	7	7
shrubs	40	40

32" screen wall @ parking lot

West (Val Vista Drive)

street border @ 165'	required	provided
trees	7	7
shrubs	40	40

32" screen wall @ parking lot

PARKING TREE REQUIREMENTS

Parking spaces provided - 35

	required	provided
trees	4	4
shrubs	24	24

Parking islands provided - 6

	required	provided
trees	6	6
shrubs	18	18

Municipal Approval Stamps

DXU ARCHITECTS
412 S. Wells Street • 2nd Floor • Chicago • IL • 60607
P: 312 955 0334 • dxuarch.com
ILLINOIS DESIGN FIRM # 184.006688

THESE DRAWINGS AND SPECIFICATIONS ARE THE CONFIDENTIAL AND PROPRIETARY PROPERTY OF DXU LLC. AND SHALL NOT BE COPIED OR REPRODUCED WITHOUT WRITTEN AUTHORIZATION.

Thomas English Retail Real Estate

THOMAS ENGLISH
725 E. 65TH STREET, STE 300
INDIANAPOLIS, IN 46220

Client

PROPOSED RETAIL DEVELOPMENT
1961 S. VAL VISTA DR
MESA, AZ 85204

Project

ARC STUDIOS
3117 E. Flower Street
Tucson, Arizona 85716
phone: 520.882.9655
www.arcstudiosinc.com
landscape architecture . urban design
environmental services . irrigation design

Consultant

NO.	DATE	REVISIONS/ISSUANCES

PROFESSIONAL CERTIFICATION:
I CERTIFY THAT THESE DOCUMENTS WERE PREPARED OR APPROVED BY ME, AND THAT I AM A DULY LICENSED ARCHITECT UNDER THE LAWS OF THE STATE OF ARIZONA, LICENSE NUMBER 59402.

REGISTERED LANDSCAPE ARCHITECT
CERTIFICATE NO. 39813
ERIC R. BARRETT
06/19
Date Signed
ARIZONA, U.S.A.

EXPIRES 9/30/2021

SEAL

FOR PERMIT/ FOR BID

DATE:	6/19/2019
PROJECT NUMBER:	01-17103
SCALE:	As indicated
DRAWN BY:	DJR
CHECKED BY:	ERB
APPROVED BY:	ERB

LANDSCAPE PLAN

L1-01

© 2017 DXU-STUDIO, LLC. All rights reserved.

ARC STUDIOS, INC. RETAINS ALL RIGHTS TO LANDSCAPE AND IRRIGATION PLANS. LANDSCAPE AND IRRIGATION PLANS MAY NOT BE REPRODUCED WITHOUT PRIOR APPROVAL BY ARC STUDIOS, INC.

IRRIGATION LEGEND

furnish and install all material per plans, details, and specifications

- S — irrigation source / point of connection - irrigation meter - 5/8" (refer to civil water plans)
- Z — reduced pressure backflow preventer - watts u009 - 1" w/ enclosure
- irrigation mainline - sch. 40 pvc 1-1/2" w/ sch. 80 fittings, 2hr pressure test at 150 psi
- A — irrigation controller - toro evolution controller w/ smart connect and weather sensor, evo-4-od-8-sc, evo-ws
- remote control valve & filter - valve - irritrol 700 series, 700-1
- irrigation sleeve - class 200 pvc - 4" mainlines and multiple lines 2" single line and controller wiring
- tree line - sch. 40 pvc - 3/4" unless otherwise shown
- shrub line - sch. 40 pvc - 3/4" unless otherwise shown
- hose end cap
- pressure regulating filter - rain bird - xcz-prb-100-com
- multi-outlet xeri-bug emitters rain bird - (6) 1gph and 2 gph ports - refer to emitter schedule
- NOT SHOWN — single-port emitters - install rain bird xeri-bug xbt-10 and xbt-20 - refer to emitter schedule

IRRIGATION VALVE SCHEDULE

Valve	Size	Type	Valve	Size	Type
A-1	1"	tree	A-5		not used
A-2	1"	shrub	A-6		not used
A-3	1"	raised planter	A-7		not used
A-4	1"	shrub	A-8		not used

VALVE SCHEDULE NOTES:

1. (M) multi-port emitter, (s) single-port emitter. Contractor may select to provide multi-port emitters for shrub plant material.
2. Contractor shall adjust controller for the proposed emitter schedule and provide watering to promote healthy growth of plant material for establishment.

EMITTER SCHEDULE

Trees	Type	Outlets	Gph outlet	Gph plant
Prosopis velutina *velvet mesquite*	m	5	2.0	10.0
Pistacia x 'Red Push' *red push pistache*	m	6	2.0	12.0
Sophora secundiflora *texas mountain laurel*	m	4	2.0	8.0
Acacia willardiana *palo blanco*	m	4	2.0	8.0
Caesalpinia cacalaco Smoothie *thornless cascalote*	m	4	2.0	8.0
Phoenix dactylifera *date palm*	m	4	2.0	8.0
Shrubs / Ground Covers	**Type**	**Outlets**	**Gph outlet**	**Gph plant**
Bauhinia lunariodes 'White' *chihuahuan orchid shrub*	s/m	3	2.0	6.0
Dodonea viscosa *hop seed*	s/m	2	2.0	4.0
Salvia clevelandii *cleveland sage*	s/m	2	2.0	4.0
Justicia californica *chuparosa*	s/m	2	1.0	2.0
Calliandra californica *baja fairy duster*	s/m	2	1.0	2.0
Wedelia texana *devil's river*	s/m	1	1.0	1.0
Salvia leucantha *mexican bush sage*	s/m	2	2.0	4.0
Setcreasea pallida *purple heart*	s/m	1	1.0	1.0
Cacti / Succulents	**Type**	**Outlets**	**Gph outlet**	**Gph plant**
Yucca rostrata *beaked yucca*	s/m	2	1.0	2.0
Hesperaloe parviflora 'breaklights' *'breaklights' hesperaloe*	s/m	2	1.0	2.0
Agave sp. *agave*	s/m	1	0.5	0.5
Euphorbia antisyphilitica *candelilla*	s/m	1	0.5	0.5
Aloe x Blue Elf *blue elf*	s/m	1	0.5	0.5
Brahea armata *mexican blue palm*	s/m	2	2.0	4.0
Portulacaria afra minima *elephant food*	s/m	1	0.5	0.5
Aloe wickensii *aloe wickensii*	s/m	1	0.5	0.5

IRRIGATION KEY NOTES

1. Property line
2. Irrigation source
3. Irrigation mainline
4. Backflow preventer
5. Irrigation sleeve - refer to paving & grading plans
6. Irrigation controller

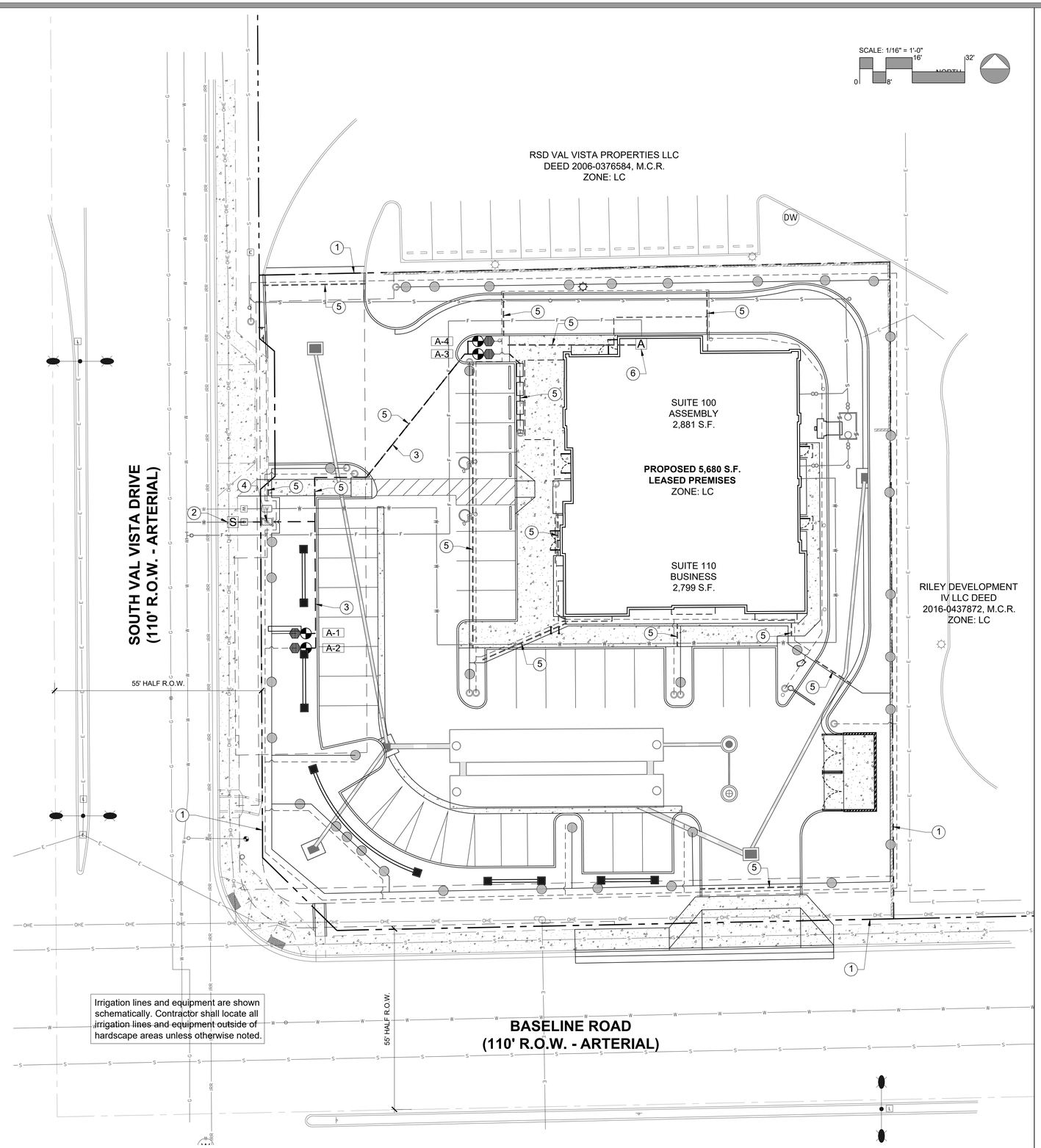

Two working days before you dig.
CALL FOR THE BLUE STAKES
1-800-782-5348
" 1-800-STAKE-IT "
Blue Stake Center

IRRIGATION NOTES:

1. The irrigation system shall utilize a potable water source. All lines shall be sch. 40 pvc unless otherwise noted on plans.
2. The irrigation system is designed with an operating pressure of 60psi at connection. Contractor shall verify pressure at connection and confirm system design with collected test information prior to continuation of installation. Tested pressure shall be noted on the as-built plans.
3. Contractor shall notify Landscape Architect if any discrepancies occur prior to installation of the irrigation system. If the pressure test is not within 5 lbs of noted design pressure, contractor shall cease installation until minimum pressure is obtained or revised design is provided.
4. Contractor shall test pressure prior to start of construction, test pressure 30 days prior to start of irrigation work and submit pressure tests and readings to architect.
5. If contractor fails to provide pressure test readings and pressure is below intended system design, contractor shall make adjustments necessary to obtain a fully function irrigation system with adequate pressure at heads at no additional cost to the owner.
6. Sleeving for irrigation shall be under all paved areas including streets and sidewalks and other hardscape elements. Contractor to coordinate with general contractor for sleeve installation.
7. Irrigation lines, valves, and associated equipment are shown schematically. Contractor shall locate all lines in unpaved areas.
8. Maximum distance for distribution tubing shall not exceed 8' from emitter to plant.
9. Irrigation controller shall be set to run per coordination of property manager. Controller shall be set to run with daily automatic adjustments to local live ET or historic ET data.
10. Contractor shall set additional programs on controller for deep root watering and plant growth from march thru June.
11. Contractor shall complete pressure test of main line and laterals with the observation of the landscape architect.
12. Contractor shall have the irrigation functional, prior to start of planting.

Municipal Approval Stamps

DXU ARCHITECTS
412 S. Wells Street • 2nd Floor • Chicago • IL • 60607
P: 312.955.0334 • dxuarch.com
ILLINOIS DESIGN FIRM # 184.006688

THESE DRAWINGS AND SPECIFICATIONS ARE THE CONFIDENTIAL AND PROPRIETARY PROPERTY OF DXU LLC. AND SHALL NOT BE COPIED OR REPRODUCED WITHOUT WRITTEN AUTHORIZATION.

Thomas English
Retail Real Estate

THOMAS ENGLISH
725 E. 65TH STREET, STE 300
INDIANAPOLIS, IN 46220

Client

PROPOSED RETAIL DEVELOPMENT
1961 S. VAL VISTA DR
MESA, AZ 85204

Project

ARC STUDIOS
3117 E. Flower Street
Tucson, Arizona 85716
phone: 520.882.9655
www.arcstudiosinc.com
landscape architecture . urban design
environmental services . irrigation design

Consultant

NO.	DATE	REVISIONS/ISSUANCES

PROFESSIONAL CERTIFICATION:
I CERTIFY THAT THESE DOCUMENTS WERE PREPARED OR APPROVED BY ME, AND THAT I AM A DULY LICENSED ARCHITECT UNDER THE LAWS OF THE STATE OF ARIZONA, LICENSE NUMBER 59402.

REGISTERED LANDSCAPE ARCHITECT
CERTIFICATE NO. 39813
ERIC R. BARRETT
06/19
Date Signed
ARIZONA, U.S.A.

EXPIRES 9/30/2021

SEAL

FOR PERMIT/ FOR BID

DATE:	6/19/2019
PROJECT NUMBER:	01-17103
SCALE:	As indicated
DRAWN BY:	DJR
CHECKED BY:	ERB
APPROVED BY:	ERB

IRRIGATION PLAN

L1-02

© 2017 DXU-STUDIO, LLC. All rights reserved.

ARC STUDIOS, INC. RETAINS ALL RIGHTS TO LANDSCAPE AND IRRIGATION PLANS. LANDSCAPE AND IRRIGATION PLANS MAY NOT BE REPRODUCED WITHOUT PRIOR APPROVAL BY ARC STUDIOS, INC.

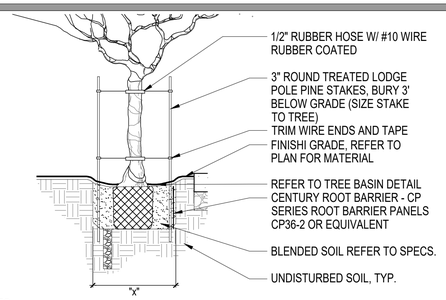

NOTES:
1. DIMENSION "X" EQUALS TWO (2) TIMES THE BOX WIDTH, DEPTH OF PIT WILL EQUAL DEPTH OF ROOTBALL.
2. SCARIFY SIDES & BOTTOM OF PIT, & BORE HOLES ON ALL PITS.
3. SET CROWN OF ROOTBALL 1/2" TO 1" ABOVE FINISH GRADE TO ALLOW FOR SETTLEMENT.
4. DO NOT COVER CROWN WITH SOIL.
5. ROOT GUARDS SHALL BE PROVIDED ON ALL SIDES WHERE HARDSCAPE IS ADJACENT TO PLANT.
6. REFER TO TREE STAKING DETAIL FOR ADDITIONAL INFORMATION.

1 15 GALLON & 24IN BOX - TREE PLANTING

NTS

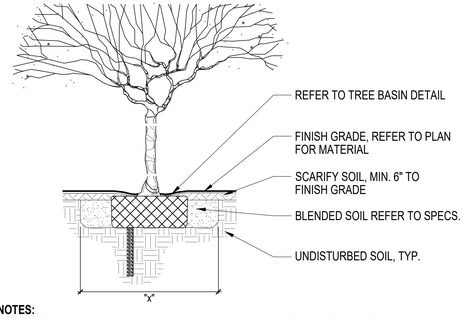

NOTES:
1. DIMENSION "X" EQUALS FOUR (4) TIMES THE BOX WIDTH, DEPTH OF PIT WILL EQUAL DEPTH OF ROOTBALL.
2. SCARIFY SIDES & BOTTOM OF PIT, & BORE HOLES ON ALL PITS.
3. SET CROWN OF ROOTBALL 1/2" TO 1" ABOVE FINISH GRADE TO ALLOW FOR SETTLEMENT.
4. DO NOT COVER CROWN WITH SOIL.

2 36IN BOX OR LARGER - TREE PLANTING

NTS

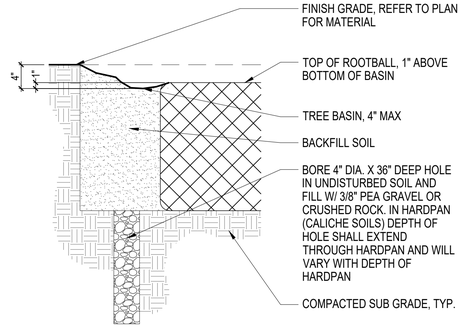

NOTES:
1. TREE BASINS NOT TO EXCEED 4" DEPTH.
2. TOP OF ROOTBALL TO BE EXPOSED TO SURFACE.
3. BOTTOM OF PLANT PIT EQUAL TO DEPTH OF ROOTBALL.

3 TREE BASIN

NTS

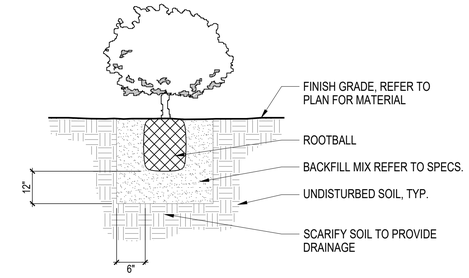

NOTES:
1. SET CROWN OF ROOTBALL 1/2" TO 1" ABOVE FINISH GRADE TO ALLOW FOR SETTLEMENT.
2. DO NOT COVER CROWN WITH SOIL.
3. SETTLE BACKFILL BY WATERING, AND COMPACT TO REMOVE AIR POCKETS.

4 SHRUB PLANTING

NTS

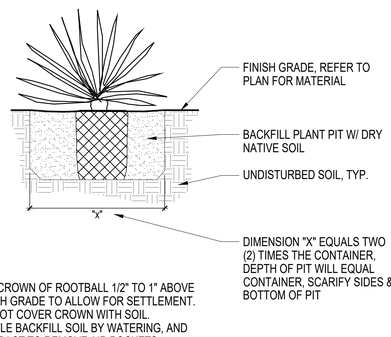

NOTES:
1. SET CROWN OF ROOTBALL 1/2" TO 1" ABOVE FINISH GRADE TO ALLOW FOR SETTLEMENT.
2. DO NOT COVER CROWN WITH SOIL.
3. SETTLE BACKFILL SOIL BY WATERING, AND COMPACT TO REMOVE AIR POCKETS.

5 ACCENT PLANTING

NTS

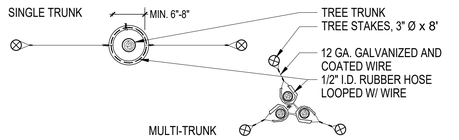

6 TREE STAKING

NTS

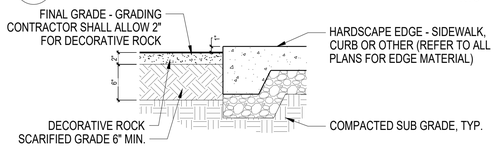

7 FINAL GRADE HARDSCAPE TO DEC. ROCK

NTS

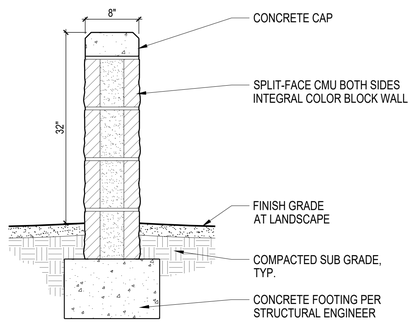

NOTES:
1. SPLIT-FACE DOUBLE SIDED TO MATCH BUILDING COLOR WITH STANDARD CONCRETE CAP FOR APPROVAL BY OWNER AND ARCHITECT.
2. PROVIDE WATERPROOFING ON ALL SURFACES BELOW GRADE.
3. SLOPE TOP OF FOOTINGS.

8 32" SPLIT-FACE CMU SCREEN WALL

NTS

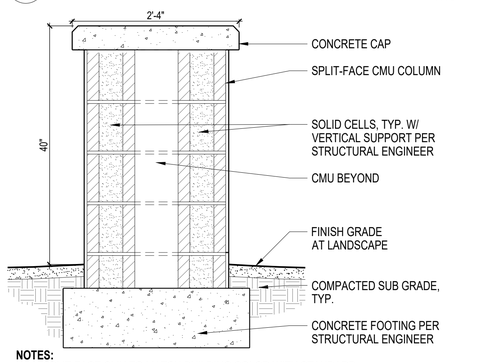

NOTES:
1. SPLIT-FACE CMU TO MATCH BUILDING COLOR WITH STANDARD CONCRETE CAP FOR APPROVAL BY OWNER AND ARCHITECT.
2. PROVIDE WATERPROOFING ON ALL SURFACES BELOW GRADE.
3. SLOPE TOP OF FOOTINGS.

9 40" SPLIT-FACE CMU COLUMN

NTS

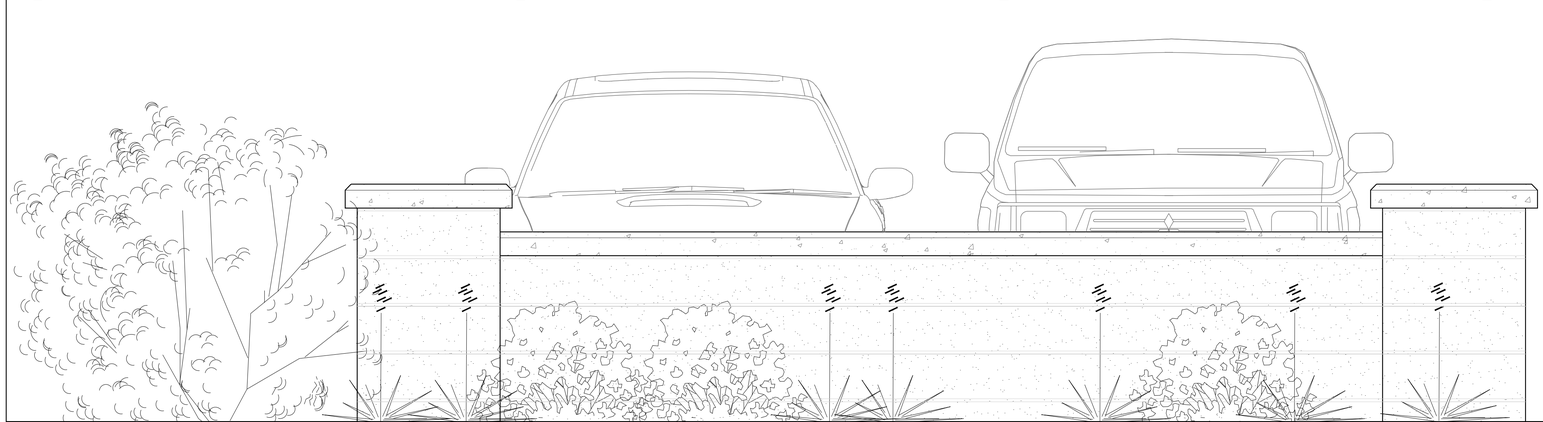

10 SCREEN WALL ELEVATION

Two working days before you dig, CALL FOR THE BLUE STAKES
1-800-782-5348
" 1-800-STAKE-IT "
Blue Stake Center

GENERAL LANDSCAPING NOTES:

1. The Landscape Architect, or his representative, reserve the right to refuse any plant materials he deems unacceptable. (see specifications)
2. For clarification of discrepancies between the drawings and the site, it should be brought to the attention of the Landscape Architect prior to beginning work.
3. Plant list quantities are provided for contractor's convenience only. Plans take precedence.
4. Finished grade in decorative rock areas shall be 1" below adjacent header board, paving, curbing, etc.
5. Plants shall be quality material having a growth habit that is normal for the species and be sound, vigorous, healthy, and free from insects and injury.
6. All earthwork is to be done so that all water drains away from all structures.
7. All underground utilities are to be located before digging.
8. All plant material to be guaranteed for a period of one (1) year after final acceptance.
9. Landscape contractor shall review and accept all rough/ finish grade on all landscaped areas prior to installation of irrigation and landscape. Contractor shall remove all spoils prior to installation of decorative rock for finish grade.
10. In the event of major discrepancies between the plans and field conditions, contractor shall notify the Landscape Architect immediately.
11. All existing trees and landscape to remain shall be protected and watered during all phases of construction. If any tree dies from damage or neglect, it shall be replaced with a like species and size at no additional cost to owner.
12. Test drainage of plant beds and pits by filling with water. Conditions permitting the retention of water in locations for more than twenty-four (24) hours shall be brought to the attention of the Landscape Architect prior to any planting.
13. Contractor is responsible for providing sleeves to all landscape areas regardless whether they are shown on plans or not. Refer to sleeving schedule for size and quantity.
14. Final plant locations must be in compliance with all utility setback requirements.
15. Irrigation lines are shown schematically; locate all line in unpaved areas.
16. The general contractor (gc) takes full liability for this landscape and irrigation, and any damage to roadway, sidewalk and utilities.
17. The landscape and irrigation shall be installed per associated specifications.
18. All site contouring and finish grading shall be completed and accepted by the landscape contractor.
19. Materials and improvements placed and/or maintained within the sight visibility triangles shall be located so as not to interfere with a visibility plane described by an area measured between 30 and 72 inches in height above the finished grade of the adjacent roadway surface.
20. It is the owners responsibility to keep the sight visibility triangles (svt), and the pedestrian access area clear of vegetation at all times.
21. The owner understands that if the City of Mesa transportation department or any utility company needs to work within the row in the landscaped area, plants and irrigation may be destroyed without replacement or repair.
22. The owner takes full liability for this landscape and irrigation, and any damage to roadway, sidewalk and utilities.
23. The only private irrigation equipment that is allowed within the row are lateral lines, tubing and emitters that are not under constant pressure. All other equipment must be on private property (excluding water meter).
24. The property owner shall replace dead or missing vegetation within 14 days to ensure full compliance with approved landscape plans.

Municipal Approval Stamps

DXU ARCHITECTS
412 S. Wells Street • 2nd Floor • Chicago • IL • 60607
P: 312.955.0334 • dxuarch.com
ILLINOIS DESIGN FIRM # 184.006688

THESE DRAWINGS AND SPECIFICATIONS ARE THE CONFIDENTIAL AND PROPRIETARY PROPERTY OF DXU LLC. AND SHALL NOT BE COPIED OR REPRODUCED WITHOUT WRITTEN AUTHORIZATION.

Client

Thomas English Retail Real Estate

THOMAS ENGLISH
725 E. 65TH STREET, STE 300
INDIANAPOLIS, IN 46220

Project

PROPOSED RETAIL DEVELOPMENT
1961 S. VAL VISTA DR
MESA, AZ 85204

ARC STUDIOS
3117 E. Flower Street
Tucson, Arizona 85716
phone: 520.882.9655
www.arcstudiosinc.com
landscape architecture . urban design
environmental services . irrigation design

Consultant

NO.	DATE	REVISIONS/ISSUANCES

PROFESSIONAL CERTIFICATION:
I CERTIFY THAT THESE DOCUMENTS WERE PREPARED OR APPROVED BY ME, AND THAT I AM A DULY LICENSED ARCHITECT UNDER THE LAWS OF THE STATE OF ARIZONA, LICENSE NUMBER 59402.

REGISTERED LANDSCAPE ARCHITECT
CERTIFICATE NO. 39813
ERIC R. BARRETT
Date Signed 06/19
ARIZONA, U.S.A.

EXPIRES 9/30/2021

SEAL

FOR PERMIT/ FOR BID

DATE:	6/19/2019
PROJECT NUMBER:	01-17103
SCALE:	As indicated
DRAWN BY:	DJR
CHECKED BY:	ERB
APPROVED BY:	ERB

LANDSCAPE DETAILS

L2-01

© 2017 DXU-STUDIO, LLC. All rights reserved.

ARC STUDIOS, INC. RETAINS ALL RIGHTS TO LANDSCAPE AND IRRIGATION PLANS. LANDSCAPE AND IRRIGATION PLANS MAY NOT BE REPRODUCED WITHOUT PRIOR APPROVAL BY ARC STUDIOS, INC.

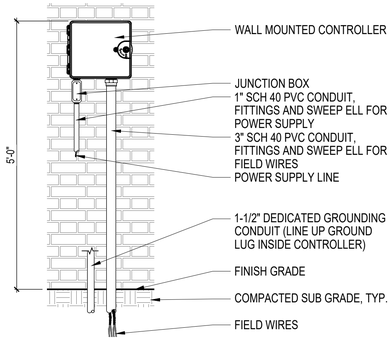

NOTES:
1. PROVIDE PROPER GROUNDING COMPONENTS TO ACHIEVE GROUND RESISTANCE OF 10 OHMS OR LESS.

1 WALL MOUNTED CONTROLLER

NTS

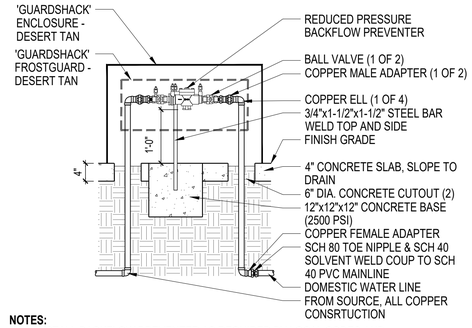

NOTES:
1. INSTALL BACKFLOW PREVENTER AS REQUIRED BY LOCAL CODES AND HEALTH DEPARTMENT AND TEST FOR POTABLE WATER SOURCE. VERIFY LOCAL REQUIREMENTS PRIOR TO INSTALLATION.
2. PLACE BACKFLOW PREVENTER WITHIN SECURITY ENCLOSURE. (SEE SPECS.)
3. OPEN AND CLOSE ENCLOSURE WITHOUT MODIFICATIONS.

2 REDUCED PRESSURE BACKFLOW PREVENTER

NTS

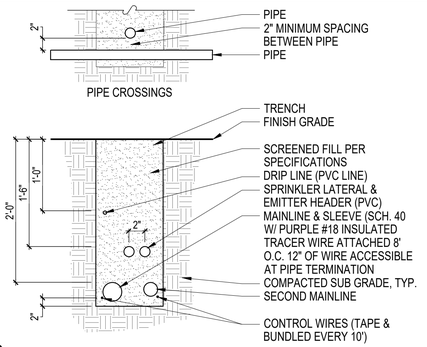

NOTES:
1. ALL MAINLINES TO BE INSTALLED IN ACCORDANCE W/ MANUFACTURER'S SPECIFICATIONS.
2. TRENCH WIDTH & DEPTH TO VARY DEPENDING ON NUMBER & TYPES OF PIPES CONTAINED THERE IN.
3. TRACER WIRE AND METALLIC TAPE INSTALLED WITH MAINLINES.
4. 4" PIPE & LARGER SHALL BE 30" BELOW FINISH GRADE.

3 IRRIGATION TRENCHING

NTS

NOTES:
1. ALL 1/2" LATERAL PIPE TO BE CLASS 315 PVC. ALL PIPE 3/4" TO 2-1/2" TO BE SCH. 40 PVC, PIPE 3" AND LARGER TO BE CLASS 200 PVC OR AS NOTED ON IRRIGATION LEGEND.
2. MAIN LINE - SCH. 80 FITTINGS.
3. LATERAL AND DRIP LINES SCH. 40 FITTINGS.
4. PRESSURE TESTS, 4 HOURS:
   - MAIN LINE AT 150 PSI
   - LATERALS AND DRIP LINE AT 70 PSI

PIPE SIZE	FLOW (GPM)
1/2"	0 - 5
3/4"	5 - 10
1"	10 - 12
1-1/4"	12 - 20
1-1/2"	20 - 30
2"	30 - 46
2-1/2"	46 - 60
3"	60 - 110
4"	110 - 190
6"	190 - 340

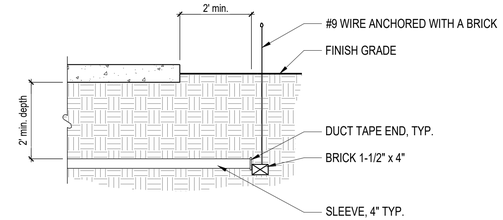

NOTES:
1. ALL PVC IRRIGATION SLEEVES TO BE SCH. 40 PVC PIPE.
2. ALL JOINTS TO BE SOLVENT WELDED AND WATERTIGHT.
3. WHERE THERE IS MORE THAN ONE SLEEVE EXTEND THE SMALLER SLEEVE TO 24" MINIMUM ABOVE FINISH GRADE.
4. MECHANICALLY TAMP TO 95% PROCTOR.

4 SLEEVING

NTS

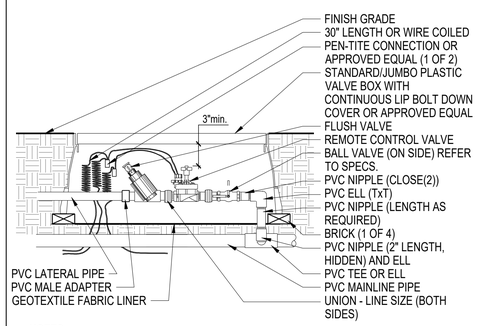

NOTES:
1. PROVIDE DECODERS AS REQUIRED FOR 2-WIRE SYSTEMS
2. GREEN BOXES IN TURF AREAS.
3. TAN BOXES IN HYDRO-SEED OR DECORATIVE ROCK AREAS.
4. PURPLE BOXES IN RECLAIMED SYSTEMS.

5 REMOTE CONTROL VALVE - DRIP/BUBBLER

NTS

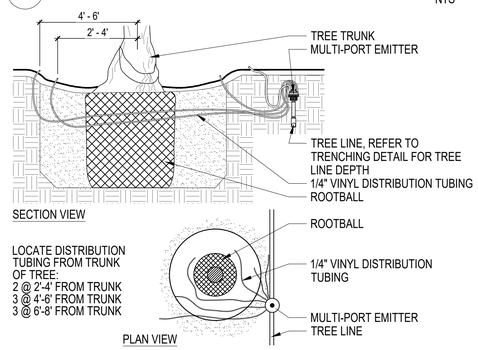

NOTES:
1. INSTALL DISTRIBUTION TUBES EQUALLY AROUND EDGE OF ROOTBALL. DRIP TUBING AT SURFACE TO CLEAR FINAL GRADE BY A MIN. OF 1" AND A MAX. OF 2". DETAIL REPRESENTS TYP. INSTALLATION REFER TO IRRIGATION LEGEND FOR MULTI-PORT EMITTER QUANTITIES.

6 MULTI-PORT EMITTER DRIP TUBING @ TREE

NTS

7 PIPE SIZING SCHEDULE

NTS

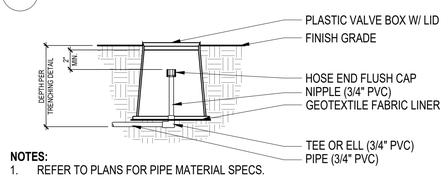

NOTES:
1. REFER TO PLANS FOR PIPE MATERIAL SPECS.

8 HOSE END CAP

NTS

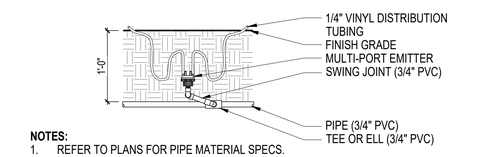

NOTES:
1. REFER TO PLANS FOR PIPE MATERIAL SPECS.

9 SINGLE OUTLET EMITTER

NTS

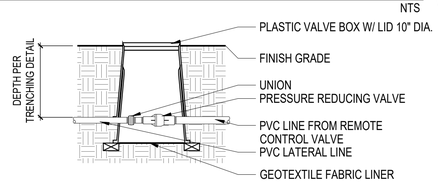

10 MULTI-PORT EMITTER

NTS

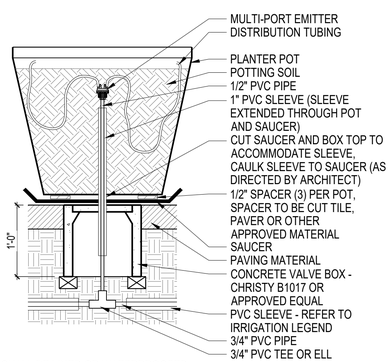

NOTES:
1. ALL POTS SHALL BE LINED OR WATERPROOFED.
2. ALL POTS SHALL BE BACK FILLED WITH POTTING SOIL T0 1/2" OF TOP AFTER COMPACTION.

11 POT IRRIGATION

NTS

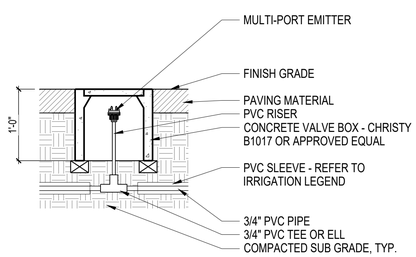

12 CONCRETE PULL BOX

NTS

13 PRESSURE REDUCING VALVE

NTS

Two working days before you dig, CALL FOR THE BLUE STAKES
1-800-782-5348
" 1-800-STAKE-IT "
Blue Stake Center

Municipal Approval Stamps

DXU ARCHITECTS
412 S. Wells Street • 2nd Floor • Chicago • IL • 60607
P: 312.955.0334 • dxuarch.com
ILLINOIS DESIGN FIRM # 184.006688

THESE DRAWINGS AND SPECIFICATIONS ARE THE CONFIDENTIAL AND PROPRIETARY PROPERTY OF DXU LLC. AND SHALL NOT BE COPIED OR REPRODUCED WITHOUT WRITTEN AUTHORIZATION.

Thomas English Retail Real Estate

THOMAS ENGLISH
725 E. 65TH STREET, STE 300
INDIANAPOLIS, IN 46220

Client

PROPOSED RETAIL DEVELOPMENT
1961 S. VAL VISTA DR
MESA, AZ 85204

Project

ARC STUDIOS
3117 E. Flower Street
Tucson, Arizona 85716
phone: 520.882.9655
www.arcstudiosinc.com
landscape architecture . urban design
environmental services . irrigation design

Consultant

NO.	DATE	REVISIONS/ISSUANCES

PROFESSIONAL CERTIFICATION:
I CERTIFY THAT THESE DOCUMENTS WERE PREPARED OR APPROVED BY ME, AND THAT I AM A DULY LICENSED ARCHITECT UNDER THE LAWS OF THE STATE OF ARIZONA, LICENSE NUMBER 59402.

REGISTERED LANDSCAPE ARCHITECT
CERTIFICATE NO. 39813
ERIC R. BARRETT
06/19
Date Signed
ARIZONA, U.S.A.

EXPIRES 9/30/2021

SEAL

FOR PERMIT/ FOR BID

DATE:	6/19/2019
PROJECT NUMBER:	01-17103
SCALE:	As indicated
DRAWN BY:	DJR
CHECKED BY:	ERB
APPROVED BY:	ERB

IRRIGATION DETAILS

L2-02

© 2017 DXU-STUDIO, LLC. All rights reserved.

ARC STUDIOS, INC. RETAINS ALL RIGHTS TO LANDSCAPE AND IRRIGATION PLANS. LANDSCAPE AND IRRIGATION PLANS MAY NOT BE REPRODUCED WITHOUT PRIOR APPROVAL BY ARC STUDIOS, INC.